PHILIPS 29PT9413

MODEL

SERVICE MANUAL

MD2.25E
AA

Service
Service
Service

Service Manual

Supplement to Service Manual:

MD2.21E/MD2.22E AA GB	4822 727 21484
MD2.21E/MD2.22E AA NL	4822 727 21485
MD2.21E/MD2.22E AA D	4822 727 21486
MD2.21E/MD2.22E AA F	4822 727 21487
MD2.21E/MD2.22E AA I	4822 727 21488
MD2.21E/MD2.22E AA E	4822 727 21489

©Copyright reserved 1998 Philips Consumer Electronics B.V. Eindhoven, The Netherlands. All rights reserved. No part of this publication may be reproduced, stored in a retrieval system or transmitted, in any form or by any means, electronic, mechanical, photocopying, or otherwise without the prior permision of Philips.

Published by LM9867 TV Service Department Printed in The Netherlands Subject to modification 4822 727 21611

PHILIPS

1700	C 1	2706	C 5	2715	B12	2731	C18	2752	J 2	2760	F10	2772	I12	2780	J15	2790	G19	3701	E 3	3705	B 6	3709	C 5	3716	A13	3721	E13	3732	B18	3736	C20	3754
1710	C 2	2710	B 8	2716	B12	2732	C19	2753	K 2	2761	I16	2773	J12	2781	J16	2791	G20	3702	E 4	3706	C 6	3710	D 6	3717	E10	3729	C15	3733	C18	3741	G12	3755
1765	J 9	2712	B 9	2718	E 9	2750	H 4	2754	H 3	2770	H14	2774	J12	2782	I17	2792	G20	3703	C 1	3707	C 6	3711	A 8	3719	E11	3730	C15	3734	B19	3750	G 4	3756
1791	E21	2714	B11	2720	E13	2751	K10	2755	J 2	2771	I12	2779	H15	2783	J17	2794	J16	3704	E 3	3708	D 6	3712	B10	3720	E13	3731	G13	3735	C19	3753	J 2	3757

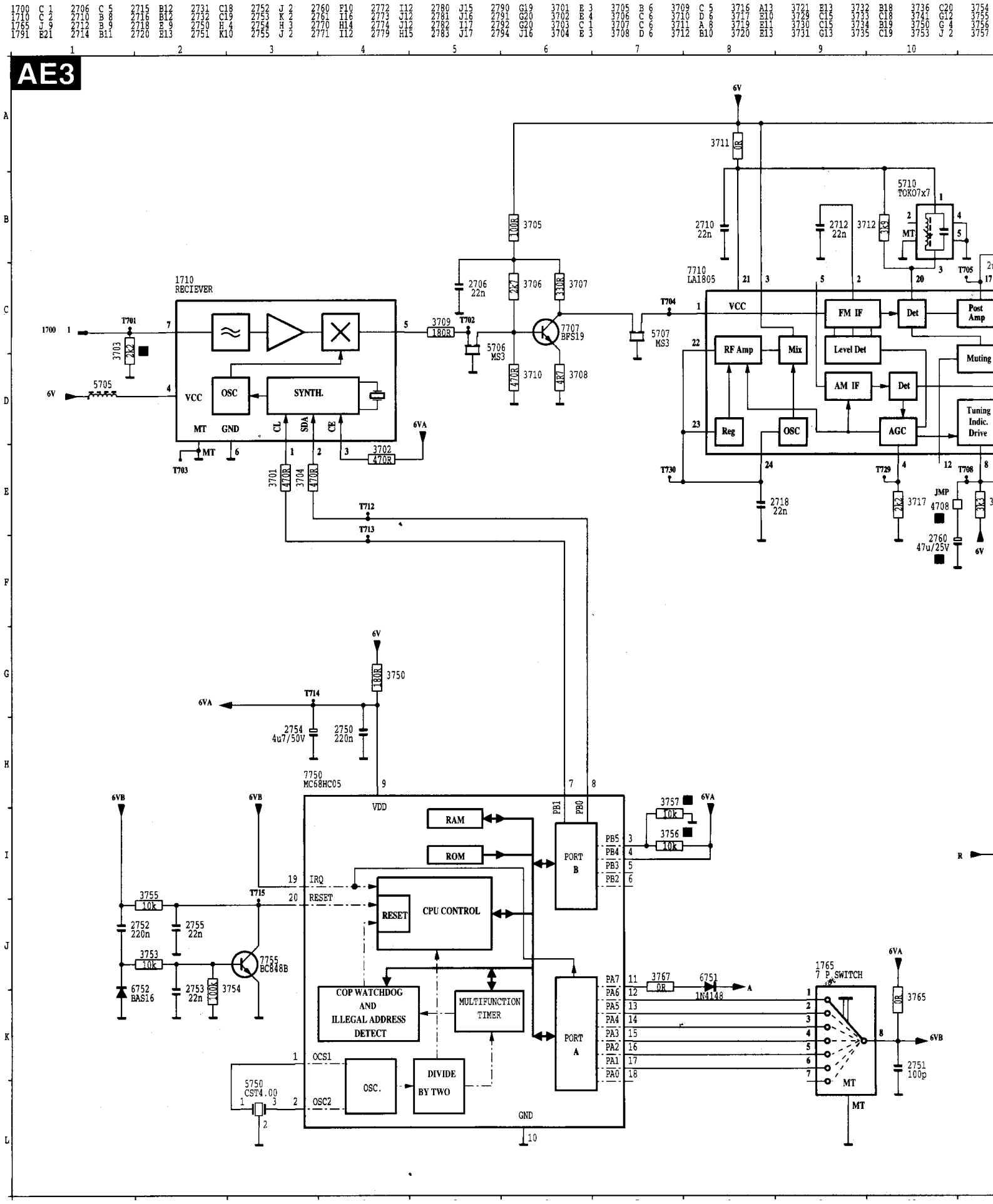

K 3	3765	K10	3772	J12	3782	I17	3790	H20	4708	E10	5710	B10	6751	J 8	7710	C 8	7770	H13	7789	I19
I 2	3767	J 7	3779	J16	3783	J18	3791	H20	5705	D 1	5730	C17	6752	K 2	7735	C19	7780	K16	7790	F19
I 7	3770	H14	3780	I15	3784	J20	3793	I19	5706	C 5	5750	L 3	6770	H13	7750	H 3	7780	I16		
H 7	3771	I12	3781	I16	3785	I18	3794	E20	5707	C 7	6710	B13	7707	C 6	7755	J 3	7784	J19		

AE3

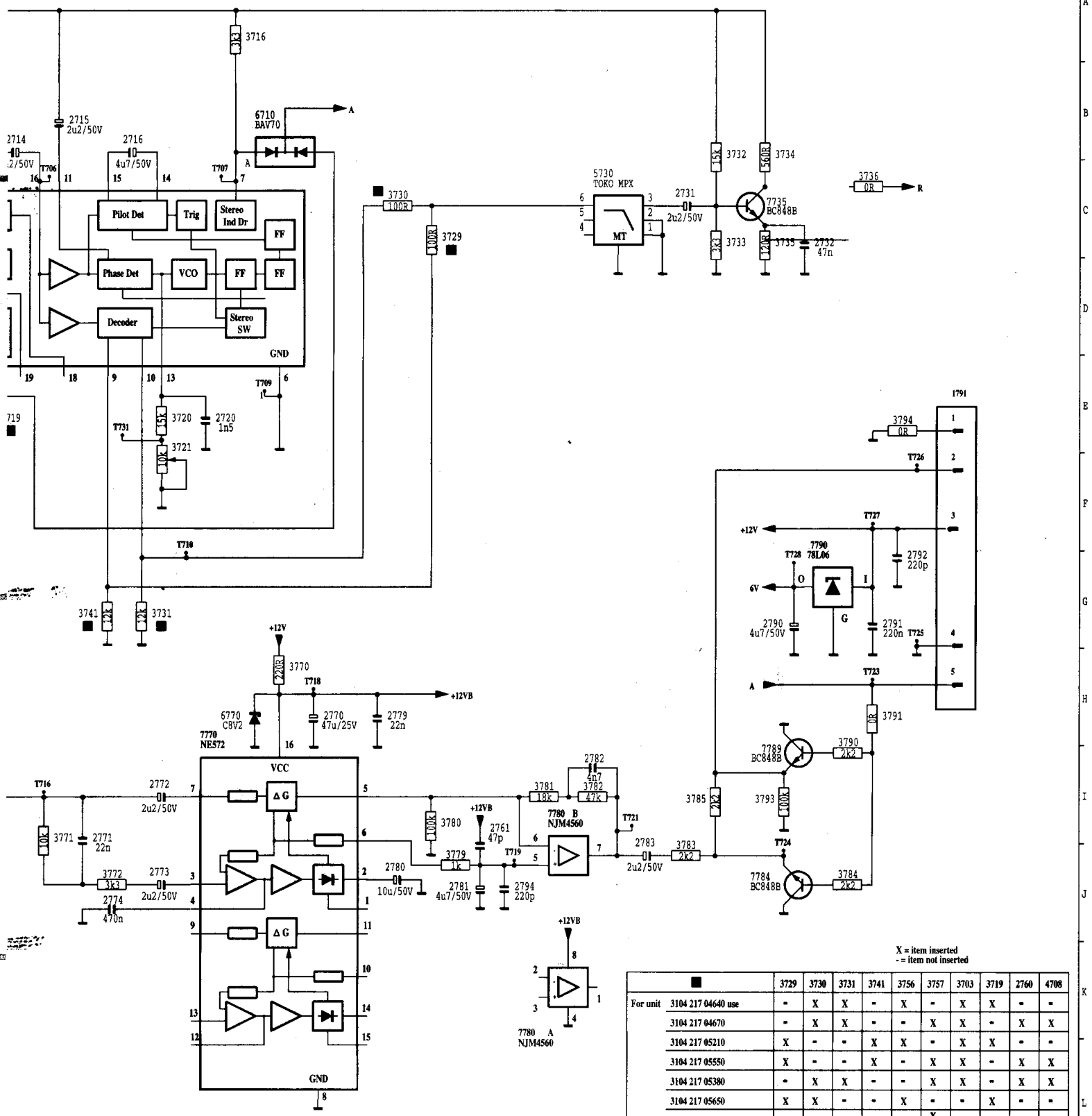

X = item inserted
- = item not inserted

	■	3729	3730	3731	3741	3756	3757	3703	3719	2760	4708
For unit	3104 217 04640 use	-	X	X	-	X	-	X	X	-	-
	3104 217 04670	-	X	X	-	-	X	X	-	X	X
	3104 217 05210	X	-	-	X	X	-	X	X	-	-
	3104 217 05550	X	-	-	X	-	X	X	-	X	X
	3104 217 05380	-	X	X	-	-	X	X	-	X	X
	3104 217 05650	X	X	-	-	X	-	-	X	-	-
	3104 217 05710	-	X	X	-	-	X	-	X	-	-
	3104 217 05730	X	X	-	-	X	-	X	X	-	-

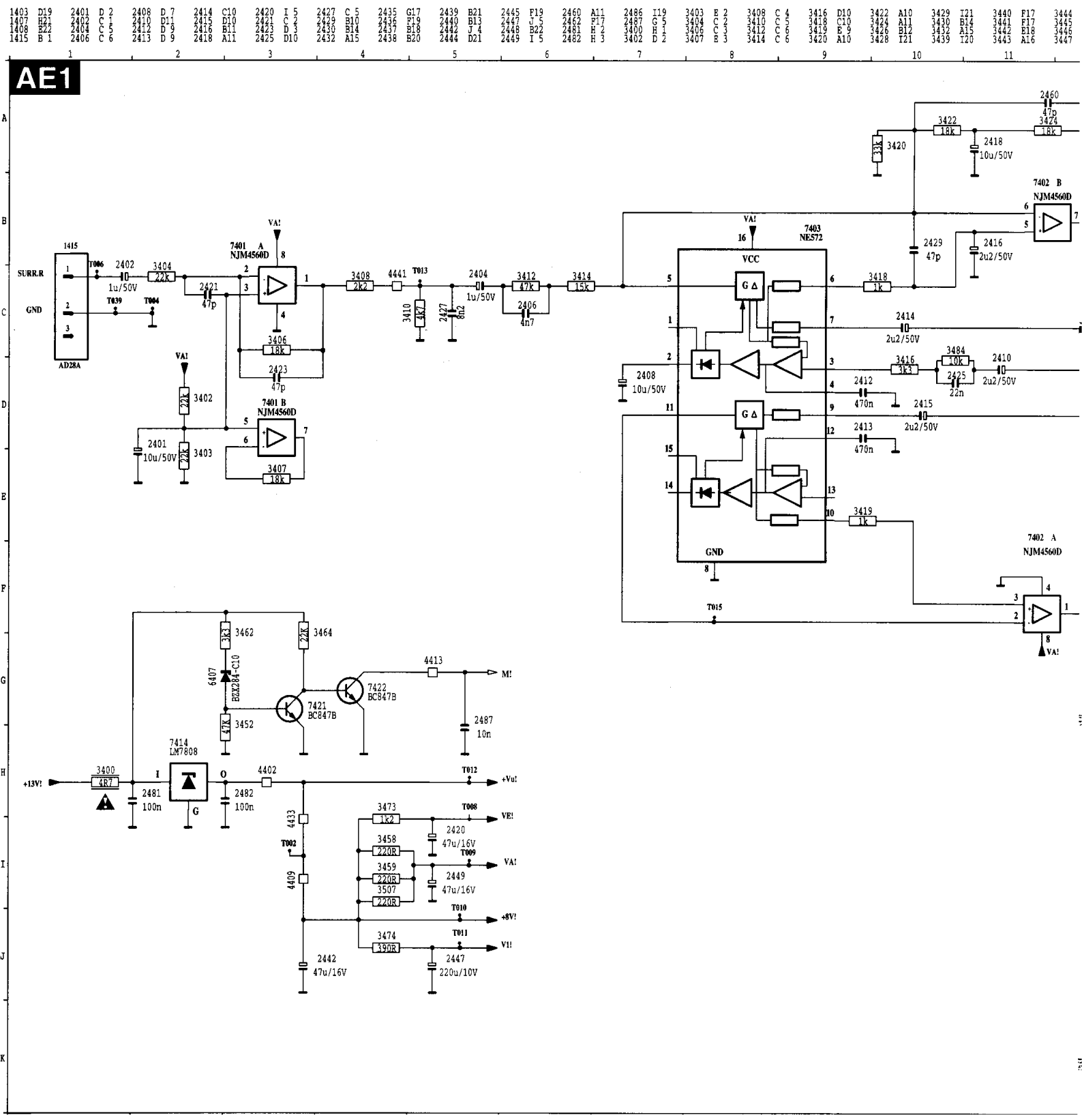
AE1
1415
SURR.R
GND
AD28A
T006
T039
T004
2402
1u/50V
3404
22k
2421
47p
VA!
7401 A
NJM4560D
3406
18k
2423
47p
3408
2k2
4441
T013
3410
4k7
2427
8n2
2404
1u/50V
3412
47k
2406
4n7
3414
15k
7401 B
NJM4560D
3402
22k
3403
22k
2401
10u/50V
3407
18k
7403
NE572
VCC
GND
G Δ
3418
1k
2429
47p
2416
2u2/50V
2414
2u2/50V
2408
10u/50V
3416
3k3
3484
10k
2425
22n
2410
2u2/50V
2412
470n
2415
2u2/50V
2413
470n
3419
1k
T015
7402 A
NJM4560D
7402 B
NJM4560D
2460
47p
3422
18k
3424
18k
3420
33k
2418
10u/50V
3462
3k3
3464
22k
6407
BZX284-C10
3452
47k
7421
BC847B
7422
BC847B
4413
M!
2487
10n
7414
LM7808
3400
4R7
+13V!
2481
100n
2482
100n
4402
T012
+Vu!
4433
4409
T002
3473
1k2
T008
VE!
2420
47u/16V
3458
220R
3459
220R
3507
220R
T009
VA!
2449
47u/16V
T010
+8V!
3474
390R
T011
V1!
2442
47u/16V
2447
220u/10V

A17	3448	A20	3452	H 3	3459	I 4	3474	J 4	3486	G18	3504	G21	4402	H 3	4410	F17	4482	F17	6401	B19	7402	E11	7404	A20	7405	B19	7419	J21
B18	3449	B20	3453	C22	3462	G 3	3480	I20	3501	G20	3505	G21	4403	F16	4413	G 5	5403	A17	6407	G 2	7402	B11	7404	A19	7406	B21	7421	G 3
B18	3450	B20	3454	F16	3464	G 4	3482	F17	3502	G20	3507	I 4	4405	B13	4433	I 3	5404	I20	7401	B 3	7403	B 9	7404	B17	7410	F18	7422	G 4
B18	3451	B22	3458	I 4	3473	H 4	3484	C10	3503	G21	4400	B12	4409	I 3	4441	C 4	5405	I21	7401	D 3	7404	B14	7404	B16	7414	H 2	7423	J20

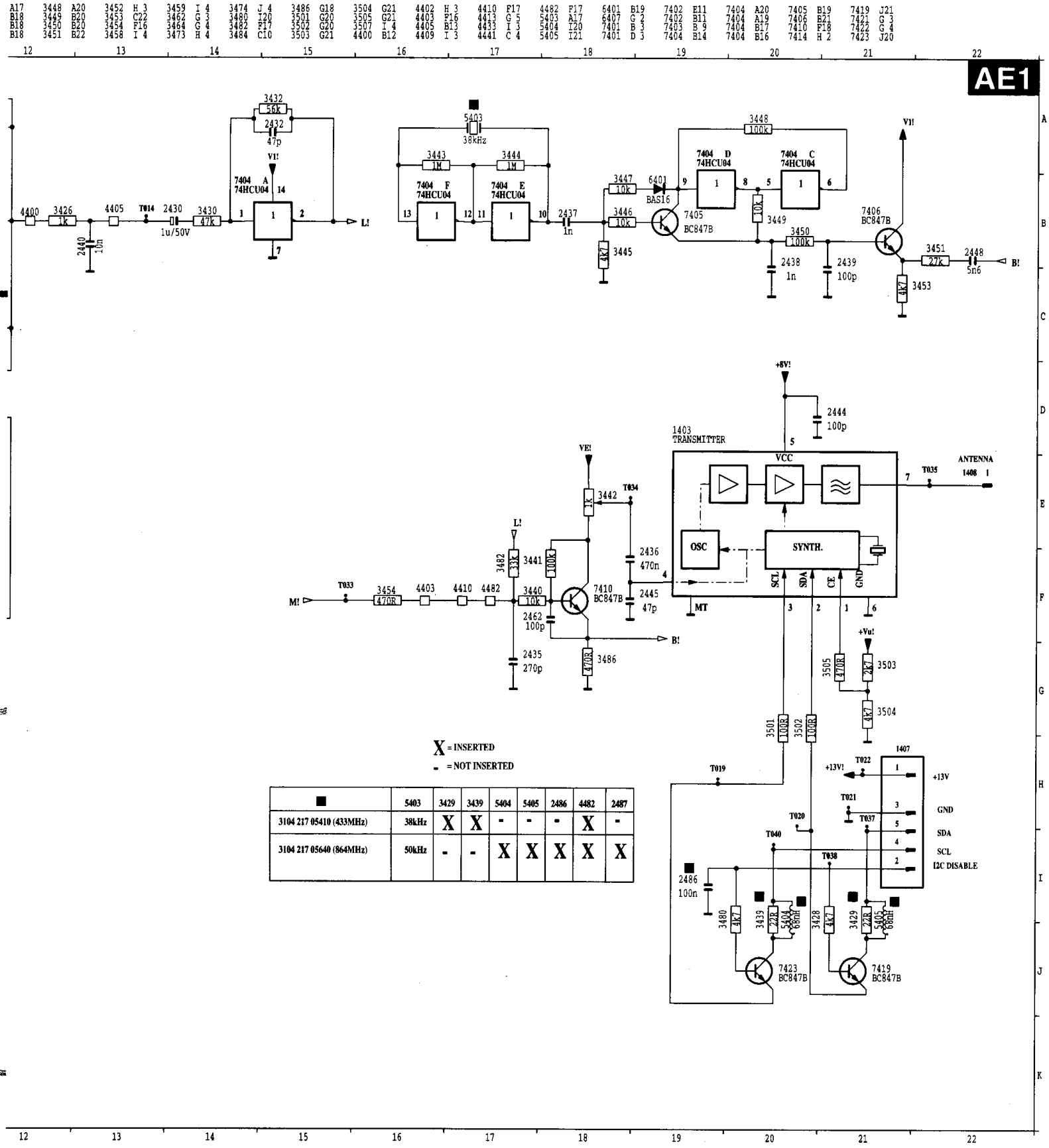

■	5403	3429	3439	5404	5405	2486	4482	2487
3104 217 05410 (433MHz)	38kHz	X	X	-	-	-	X	-
3104 217 05640 (864MHz)	50kHz	-	-	X	X	X	X	X

CL 86532021_002.AI
130598

Repair kits

Various

4822 310 11188	Cable extension kit
4822 310 10649	Supply repair kit MD2
4822 310 10707	Line repair kit MD2

Large Signal Panel [A]

Various

0301	4822 267 10912	3P male v
0302Δ	4822 267 10758	2P 87273-0351
0306	4822 267 10753	4P B04B-EHP4
0310	4822 267 10925	10P male 2,5 EHP4
0317Δ	4822 265 31326	3P male
0322	4822 267 10916	6P male v
0325	4822 265 31193	3P male
0328	4822 265 31248	3P male v 1,25 ed gy
0338	4822 267 10914	4P male v
0339	4822 267 10915	2P male v
0393	4822 265 41465	8P male v 2,5
8002	4822 320 11453	3P cable 0.5m
0045	4822 402 11135	Bracket for heatsink
0047	4822 466 92954	Spacer
0048	4822 404 31344	Bracket SCART
0050	4822 492 70871	Spring fix trans.
0057Δ	4822 492 62076	Spring fix trans.
0060	4822 695 00005	Insulator for 7541
0063	4822 466 93461	Insulator 20 X 25
0073	4822 404 31305	Bracket for 5V panel
0076	4822 256 91879	Holder for 6567
0077	4822 404 31488	Bracket LOT
8001Δ	4822 320 20216	EHT cable
0100Δ	4822 265 11253	Fuse holder
1440Δ	4822 071 51001	Fuse 0,1A
1503Δ	4822 070 33152	Fuse 3.15A
1566Δ	4822 071 54002	Fuse 4A
1572Δ	4822 071 52502	Fuse 2.5A
1572Δ	4822 071 54002	Fuse 4A
1580Δ	4822 071 52502	Fuse 2.5A

⊣⊢

2400	4822 121 43368	47µF 160V
2402Δ	4822 126 13185	680pF 10% 500V
2409	4822 126 13644	47pF 5% 63V
2411	4822 121 43526	47nF 5% 250V
2412	4822 122 31168	270pF 10% 500V
2417	4822 121 42408	220nF 5% 63V
2418Δ	4822 126 12095	220pF 10% 2KV
2419Δ	4822 121 70365	39nF 10% 400V
2420	4822 121 70594	1nF 5% 2KV
2421	4822 121 10649	1,2µF 5% 100V
2421	4822 121 42634	560nF 5% 250V
2425	4822 121 70398	11nF 5% 2KV
2426	4822 121 10551	27nF 5% 630V.
2426	4822 121 10658	24nF 5% 630V
2426Δ	4822 121 10679	15nF 5% 630V
2431	4822 122 31177	470pF 10% 500V
2433	4822 121 10506	560nF 5% 250V
2433	4822 121 10507	470nF 5% 250V
2433Δ	4822 121 10518	250V 390nF 5%
2433	4822 121 10629	430nF 5% 250V
2440	4822 126 11501	1,5nF 10% 500V
2442	4822 124 23265	4,7µF 20% 350V
2448	4822 126 13614	4,7nF 10% 50V
2450	4822 121 10509	120nF 10% 250V
2457	4822 121 43179	18nF 5% 250V
2460	4822 122 31177	470pF 10% 500V
2461	4822 124 80791	470µF 16V 20%
2462	4822 124 80791	470µF 16V 20%
2463	4822 122 31177	470pF 10% 500V
2465	4822 122 31177	470pF 10% 500V
2466	4822 124 41387	470µF 20% 25V
2467	4822 122 30057	2,7nF 10% 100V
2468	4822 124 11521	1µF 20% 250V
2480	4822 124 40763	2,2µF 100 V
2481	4822 122 31177	470pF 10% 500V
2482	4822 124 22466	1µF 20% 50V
2503	4822 122 31175	1nF 10% 500V
2504	4822 121 43066	1nF 1% 400V
2505Δ	4822 124 23492	220µF 20% 385V
2506Δ	4822 121 40487	100nF 10% 400V
2507	4822 124 41184	470µF 20% 50V
2507	4822 124 81151	22µF 50V
2508	4822 121 41856	22nF 5% 250V
2508	5322 121 42386	100nF 5% 63V
2509Δ	4822 126 13841	1nF 20% 250V
2511	4822 126 14153	2,2nF 10%B 1KV
2512	4822 126 14153	2,2nF 10%B 1KV
2513Δ	4822 124 41579	10µF 20% 50V
2514	4822 124 22263	220µF 20% 25V
2521	4822 122 32185	10pF 2% 100V
2522	5322 122 32331	1nF 10% 100V
2524	4822 124 41751	47µF 20% 50V
2525	4822 124 40255	100µF 20% 63V
2526	4822 126 10334	470pF 10% 50V
2527	4822 122 31175	1nF 10% 500V
2528	4822 121 41856	22nF 5% 250V
2531	4822 121 43066	1nF 1% 400V
2533	4822 124 40242	1µF 20% 63V
2534	4822 122 33524	22pF 5% 50V
2535	4822 126 12451	820pF 10% 50V
2538	4822 122 33531	2,2nF 10% 50V
2540Δ	4822 126 12095	220pF 10% 2KV
2541	4822 122 31177	470pF 10% 500V
2542Δ	4822 126 12095	220pF 10% 2KV
2543Δ	4822 126 13451	2,2nF 10% 2KV
2544	4822 121 70696	2,2nF 5% 2KV
2545	4822 126 11824	100pF 10%B 1KV
2548	5322 121 42386	100nF 5% 63V
2550Δ	4822 126 10727	3,3nF 20% 400V
2554	5322 121 42386	100nF 5% 63V
2557	4822 121 43179	18nF 5% 250V
2559	4822 124 81151	22µF 50V
2560	4822 122 31177	470pF 10% 500V
2562	5322 121 42465	68nF 5% 63V
2563	4822 124 12235	2200µF 20% 16V
2563	4822 124 80065	1000µF 20% 50V
2564	4822 126 11501	1,5nF 10% 500V
2565	4822 124 81151	22µF 50V
2566	4822 124 40214	1000µF 20% 25V
2568Δ	4822 126 11254	330pF 10% 2KV
2569	4822 124 22583	47µF 160V
2570	5322 121 42465	68nF 5% 63V
2571	4822 124 81029	100µF 20% 25V
2572	4822 122 31175	1nF 10% 500V
2573	4822 124 41329	2200µF 20% 35V
2574	4822 121 43526	47nF 5% 250V
2575	4822 126 13829	120pF 10% 500V
2580	5322 124 41468	1000µF 20% 40V
2581	4822 122 31175	1nF 10% 500V
2584	4822 121 41857	10nF 5% 250V
2591	4822 121 43526	47nF 5% 250V
2592	5322 121 42386	100nF 5% 63V
2593	4822 121 42408	220nF 5% 63V
2594	4822 121 42408	220nF 5% 63V
2596	5322 121 42386	100nF 5% 63V
2609	4822 126 13644	47pF 5% 63V
2612	4822 126 10334	470pF 10% 50V
2613	4822 126 10334	470pF 10% 50V
2615	4822 124 40255	100µF 20% 63V
2616	5322 121 42386	100nF 5% 63V
2617	4822 121 42408	220nF 5% 63V
2618	5322 121 42386	100nF 5% 63V
2620	5322 124 40641	10µF 20% 100V
2750	4822 124 40242	1µF 20% 63V
2751	4822 124 11523	4,7µF 20% 35V
2752Δ	4822 124 40246	4,7µF 20% 63V
2753	4822 121 41857	10nF 5% 250V
2754	5322 121 42386	100nF 5% 63V
2755	4822 124 41329	2200µF 20% 35V
2756	4822 124 22263	220µF 20% 25V
2756	4822 124 41643	100µF 20% 16V
2761	4822 121 42408	220nF 5% 63V
2762	4822 121 42408	220nF 5% 63V
2763	5322 122 32331	1nF 10% 100V
2765	4822 124 12244	33µF 10% 50V
2766	4822 124 12244	33µF 10% 50V
2767	5322 124 41468	1000µF 20% 40V
2768	5322 124 41468	1000µF 20% 40V
2776	4822 122 33531	2,2nF 10% 50V
2778	4822 122 33531	2,2nF 10% 50V
2787	4822 121 41856	22nF 5% 250V
2788	4822 121 41856	22nF 5% 250V

⊣□⊢

3407	4822 116 83883	470Ω 5% 0,5W
3409	4822 116 52256	2k2 5% 0,5W
3411	4822 116 83864	10k 5% 0,5W
3412	4822 116 83864	10k 5% 0,5W
3413	4822 116 52231	820Ω 5% 0,5W
3414	4822 116 52219	330Ω 5% 0,5W
3415	4822 117 12077	2k7 5W 5%
3415	4822 117 12618	2k2 5% 5W
3416	4822 116 83883	470Ω 5% 0,5W
3417	4822 116 52176	10Ω 5% 0,5W
3419	4822 116 52176	10Ω 5% 0,5W
3423	4822 053 10688	6Ω8 5% 1W
3425	4822 116 52176	10Ω 5% 0,5W
3426	4822 116 52176	10Ω 5% 0,5W
3430	4822 050 11002	1k 1% 0,4W
3431	4822 050 11002	1k 1% 0,4W
3443Δ	4822 052 11688	6Ω8 5% 0,5W
3448	4822 116 52234	100k 5% 0,5W
3449	4822 116 52297	68k 5% 0,5W
3449	4822 116 83884	47k 5% 0,5W
3450	4822 116 52264	27k 5% 0,5W
3450	4822 116 83882	39k 5% 0,5W
3451	4822 116 52271	33k 5% 0,5W
3451	4822 116 83884	47k 5% 0,5W
3452	4822 116 52254	20k 5% 0,5W
3457	4822 116 52292	560k 5% 0,5W
3457	4822 116 52298	680k 5% 0,5W
3458	4822 116 52272	330k 5% 0,5W
3458	4822 116 83874	220k 5% 0,5W
3458	4822 116 83878	270k 5% 0,5W
3459	4822 116 83883	470Ω 5% 0,5W
3460Δ	4822 052 10108	1Ω 5% 0,33W
3461Δ	4822 052 10108	1Ω 5% 0,33W
3462Δ	4822 052 10108	1Ω 5% 0,33W
3463Δ	4822 052 10108	1Ω 5% 0,33W
3465	4822 116 83864	10k 5% 0,5W
3466	4822 116 83864	10k 5% 0,5W
3467	4822 116 83864	10k 5% 0,5W
3468	4822 116 52234	100k 5% 0,5W
3469	4822 116 83884	47k 5% 0,5W
3470	4822 116 52269	3k3 5% 0,5W
3471	4822 116 52297	68k 5% 0,5W
3472	4822 116 52257	22k 5% 0,5W
3473	4822 050 11002	1k 1% 0,4W
3474	4822 050 11002	1k 1% 0,4W
3475	4822 050 11002	1k 1% 0,4W
3476	4822 116 52175	100Ω 5% 0,5W
3477	4822 116 52264	27k 5% 0,5W
3478Δ	4822 053 10102	1k 5% 1W
3479Δ	4822 052 10108	1Ω 5% 0,33W
3480	4822 116 52234	100k 5% 0,5W
3481	4822 050 11002	1k 1% 0,4W
3482	4822 116 83878	270k 5% 0,5W
3483Δ	4822 050 24708	4Ω7 1% 0,6W
3484Δ	4822 050 24708	4Ω7 1% 0,6W
3484	4822 116 52176	10Ω 5% 0,5W
3485	4822 050 27505	7M5 1% 0,6W
3486	4822 116 52234	100k 5% 0,5W
3487	4822 116 52175	100Ω 5% 0,5W
3488	4822 050 11002	1k 1% 0,4W
3489	4822 116 52193	39Ω 5% 0,5W
3502Δ	4822 052 11228	2Ω2 5% 0,5W
3505	4822 117 12074	7W 1Ω5 10%
3506	4822 116 40268	PTC/PTC 18Ω 276V
3507	4822 116 40268	PTC/PTC 18Ω 276V
3508	4822 116 83864	10k 5% 0,5W
3509	4822 116 52226	560Ω 5% 0,5W
3509	4822 116 52228	680Ω 5% 0,5W
3510	4822 116 83864	10k 5% 0,5W
3510	4822 116 83884	47k 5% 0,5W
3512	4822 050 11002	1k 1% 0,4W
3513Δ	4822 052 10478	4Ω7 5% 0,33W
3514	4822 050 11002	1k 1% 0,4W
3515	4822 116 52175	100Ω 5% 0,5W
3516	4822 116 52195	47Ω 5% 0,5W
3517	4822 116 52175	100Ω 5% 0,5W
3518	4822 116 83868	150Ω 5% 0,5W
3519	4822 116 52256	2k2 5% 0,5W
3521	4822 116 52304	82k 5% 0,5W
3522	4822 116 52226	560Ω 5% 0,5W
3523	4822 116 52244	15k 5% 0,5W
3524Δ	4822 052 10109	10Ω 5% 0,33W
3525	4822 116 52252	180k 5% 0,5W
3527	4822 116 52191	33Ω 5% 0,5W
3528	4822 117 12738	27k 5% 1W
3529	4822 117 10118	1M 5% 0,5W
3530	4822 116 83961	6k8 5%
3531	4822 116 52283	4k7 5% 0,5W
3532	4822 116 52285	470k 5% 0,5W
3533	4822 116 52238	12k 5% 0,5W
3534	4822 116 83864	10k 5% 0,5W
3535	4822 116 52244	15k 5% 0,5W
3536	4822 116 52243	1k5 5% 0,5W
3537	4822 116 83864	10k 5% 0,5W
3538	4822 116 52243	1k5 5% 0,5W
3539	4822 116 83864	10k 5% 0,5W
3541	4822 050 11002	1k 1% 0,4W
3543Δ	4822 052 10108	1Ω 5% 0,33W
3544	4822 053 12102	1k 5% 3W
3545	4822 117 12235	680 Ω 5% 4,8W.
3546	4822 117 11745	0Ω39 5% 1W
3547	4822 117 11745	0Ω39 5% 1W
3548	4822 116 52207	1k2 5% 0,5W
3549	4822 116 83872	220Ω 5% 0,5W
3550Δ	4822 053 21225	2M2 5% 0,5W
3551Δ	4822 053 21475	4M7 5% 0,5W
3552	4822 116 52226	560Ω 5% 0,5W
3553	4822 116 52283	4k7 5% 0,5W
3554	4822 116 52175	100Ω 5% 0,5W
3555	4822 050 21604	160k 1% 0,6W
3556	4822 116 52231	820Ω 5% 0,5W
3557	4822 116 52245	150k 5% 0,5W
3558Δ	4822 050 22702	2k7 1% 0,6W
3559	4822 101 11186	470Ω 30%LIN 0.1W
3560	4822 116 52263	2k7 5% 0,5W
3561	4822 116 83864	10k 5% 0,5W
3562	4822 116 83872	220Ω 5% 0,5W
3563	4822 116 52263	2k7 5% 0,5W
3564	4822 116 52193	39Ω 5% 0,5W
3565	4822 116 83864	10k 5% 0,5W
3566	4822 116 52264	27k 5% 0,5W
3567Δ	4822 053 10108	1Ω 5% 1W
3568	4822 116 52291	56k 5% 0,5W
3569	4822 116 52175	100Ω 5% 0,5W
3570	4822 116 83872	220Ω 5% 0,5W
3572	4822 116 83884	47k 5% 0,5W
3573Δ	4822 117 12444	1Ω8 5% 3W
3575Δ	4822 053 11102	1k 5% 2W
3582	4822 116 83864	10k 5% 0,5W
3584	4822 116 83864	10k 5% 0,5W
3586	4822 116 52256	2k2 5% 0,5W
3587	4822 116 83864	10k 5% 0,5W
3588	4822 116 83864	10k 5% 0,5W
3589	4822 116 52235	1M 5% 0,5W
3590	4822 053 10473	47k 5% 1W
3592	4822 116 52283	4k7 5% 0,5W
3593	4822 050 11002	1k 1% 0,4W
3594	4822 116 83864	10k 5% 0,5W
3595	4822 116 52303	8k2 5% 0,5W
3596	4822 050 11002	1k 1% 0,4W
3597	4822 116 83864	10k 5% 0,5W
3598	4822 116 83864	10k 5% 0,5W
3601	4822 116 80176	1Ω 5% 0,5W
3601	4822 116 80676	1Ω5 5% 0,5W
3602	4822 116 80176	1Ω 5% 0,5W
3602	4822 116 80676	1Ω5 5% 0,5W
3603	4822 116 80176	1Ω 5% 0,5W
3603	4822 116 81039	1Ω8 5% 0,5W
3609Δ	4822 052 10472	4k7 5% 0,33W
3610	4822 050 11002	1k 1% 0,4W
3611Δ	4822 050 25601	560Ω 1% 0,6W
3612Δ	4822 050 25601	560Ω 1% 0,6W
3613	4822 050 11002	1k 1% 0,4W
3614	4822 050 11002	1k 1% 0,4W
3617Δ	4822 052 10158	1Ω5 5% 0,33W
3618	4822 116 83868	150Ω 5% 0,5W
3618	4822 116 83872	220Ω 5% 0,5W
3619	4822 116 83868	150Ω 5% 0,5W
3619	4822 116 83872	220Ω 5% 0,5W
3620	4822 116 83864	10k 5% 0,5W
3752Δ	4822 052 10828	8Ω2 5% 0,33W
3753Δ	4822 052 10828	8Ω2 5% 0,33W
3755	4822 116 83006	2M 7 5% 0,5W
3760	4822 116 52276	3k9 5% 0,5W
3761	4822 116 52283	4k7 5% 0,5W
3762	4822 116 52276	3k9 5% 0,5W
3763	4822 116 52228	680Ω 5% 0,5W
3764	4822 116 52283	4k7 5% 0,5W
3765	4822 116 52263	2k7 5% 0,5W
3765	4822 116 52289	5k6 5% 0,5W
3766	4822 050 11002	1k 1% 0,4W
3770	4822 116 52251	18k 5% 0,5W
3771	4822 116 83872	220Ω 5% 0,5W
3772	4822 116 83864	10k 5% 0,5W

∼

5400	4822 157 71467	39µH 10%
5402	4822 157 71453	27µH 10%
5410Δ	4822 157 63252	Line driver transf.
5418	4822 526 10494	Ferrite bead
5421	4822 157 10398	Linearity corr. 25"/ 29" SF
5421	4822 157 10583	Linearity corr. 28" SF
5421	4822 157 11061	Linearity corr. 24"/ 32" SF
5422	4822 157 11212	Bridge coil 24"/28" VGA
5422	4822 157 71535	Bridge coil 25"/29" SF
5422	4822 157 71829	Bridge coil 24"/28"/ 32" SF
5423	4822 157 71097	0.56µH 20%
5425	4822 526 10494	Ferrite bead
5426	4822 157 63506	Ferrite bead
5430Δ	4822 140 10559	L.O.T.
5460	4822 157 71466	2,2µH 20%
5461	4822 157 71466	2,2µH 20%
5462	4822 157 71466	2,2µH 20%
5480	4822 157 63253	Choke CU15
5507	4822 157 10419	100µH 10%
5525	4822 526 10494	Ferrite bead
5542	4822 157 63506	Ferrite bead
5543	4822 526 10494	Ferrite bead
5544	4822 157 63506	Ferrite bead
5545	4822 157 63506	Ferrite bead
5550	4822 146 10724	Transf. supply CE425V
5561	4822 158 10525	330µH 10%
5567	4822 157 63506	Ferrite bead
5572	4822 526 10494	FERRITE BEAD
5617	4822 157 63506	FERRITE BEAD
5701	4822 526 10494	FERRITE BEAD
5750	4822 157 10452	10µH 10%
5751	4822 157 10452	10µH 10%

⊣▶⊢

6409Δ	4822 130 61219	BZX79-B10
6421	4822 130 83185	BY359F-1500
6422Δ	4822 130 33531	BY229F-600
6441	4822 130 42488	BYD33D
6451	4822 130 30862	BZX79-B9V1
6451Δ	4822 130 34197	BZX79-B12
6452Δ	4822 130 30621	1N4148
6453	4822 130 34379	BZX79-B27
6454	4822 130 30842	BAV21
6460	5322 130 31938	BYV27-200
6462	5322 130 31938	BYV27-200
6463	5322 130 31938	BYV27-200
6465	4822 130 42488	BYD33D
6466	4822 130 42488	BYD33D
6471Δ	4822 130 61219	BZX79-B10
6479	4822 130 34383	BZX79-B47
6480Δ	4822 130 61219	BZX79-B10
6481Δ	4822 130 30621	1N4148
6482	5322 130 31504	BZX79-B3V3

6483	4822 130 30842	BAV21
6506	4822 130 42488	BYD33D
6507	4822 130 42488	BYD33D
6508	4822 130 42488	BYD33D
6509Δ	4822 130 61219	BZX79-B10
6509	5322 130 34563	BZX79-C2V7
6510Δ	4822 130 31933	1N5061
6511Δ	4822 130 31933	1N5061
6512Δ	4822 130 31933	1N5061
6513Δ	4822 130 31933	1N5061
6514	5322 130 34563	BZX79-C2V7
6515Δ	4822 130 30621	1N4148
6516Δ	4822 130 31983	BAT85
6518Δ	4822 130 30621	1N4148
6524	4822 130 32245	BYV10-40
6525Δ	4822 130 31982	BYV27-100
6540Δ	4822 130 31933	1N5061
6541Δ	4822 130 31933	1N5061
6542	4822 130 42606	BYD33J
6545	4822 130 32343	BYV26C
6548	4822 130 42488	BYD33D
6550	4822 130 34441	BZX79-B22
6560	4822 130 34278	BZX79-B6V8
6561Δ	4822 130 31982	BYV27-100
6562Δ	4822 130 80791	BYV28-200/20
6562	4822 130 83865	SB360
6563Δ	4822 130 30621	1N4148
6564	4822 130 34233	BZX79-B5V1
6566Δ	4822 130 31933	1N5061
6567	4822 130 81123	BY229F-800
6572Δ	4822 130 80791	BYV28-200/20
6573Δ	4822 130 80791	BYV28-200/20
6576Δ	4822 130 31983	BAT85
6577Δ	4822 130 31983	BAT85
6581	5322 130 31938	BYV27-200
6590	4822 130 42606	BYD33J
6591Δ	4822 130 30621	1N4148
6592Δ	4822 130 34197	BZX79-B12
6614	5322 130 31938	BYV27-200
6617	4822 130 42488	BYD33D
6618	4822 130 32904	BZV85-C5V6
6618	5322 130 33635	BZV85-C8V2
6620	4822 130 42488	BYD33D
6753	4822 130 34195	BZX79-B13
6754Δ	4822 130 31024	BZX79-B18
6755Δ	4822 130 30621	1N4148
6756Δ	4822 130 30621	1N4148
6757	4822 130 34174	BZX79-B4V7
6770Δ	4822 130 30621	1N4148

7408	4822 130 63316	BSN304
7409	4822 130 41594	PH2369
7421	4822 130 10815	BU2520DW
7470	4822 130 63546	IRF620FI
7475	4822 130 42159	BF819
7480	4822 130 63546	IRF620FI
7480	4822 130 63726	MTP3055EFI
7507	4822 130 10195	BT137-800E
7512	4822 130 40959	BC547B
7513	4822 130 44568	BC557B
7514	4822 130 44568	BC557B
7515	4822 130 44568	BC557B
7520	4822 209 15338	MC44604P
7541	4822 130 10196	STW9NA60
7555	4822 209 81397	TL431CLPST
7556Δ	4822 130 10816	SOC1014TV
7560	4822 209 72042	L78L05ACZ
7561	4822 130 40959	BC547B
7562	4822 130 40959	BC547B
7569	4822 209 12334	L4940V85
7588Δ	4822 130 44503	BC547C
7589	4822 130 40959	BC547B
7590	4822 130 10243	2N5064
7591	4822 130 40959	BC547B
7592	4822 130 40959	BC547B
7600	4822 209 90009	TDA8177
7761	4822 209 32641	TDA2616Q
7770	4822 130 44568	BC557B

mainsfilter [B]

2422	4822 265 11253	Fuse holder
2422	4822 267 10912	3P male v
2422	4822 267 10758	2P 87273-0351
1046	4822 212 11483	Mainsfilter panel MD2.25
1501Δ	4822 253 30467	Fuse 6,3A

2500Δ	4822 126 13589	470nF 20% 275V
2501	4822 121 70141	33nF 5% 400V
2506	4822 124 11913	22nF 20% 275V

3503	4822 117 12181	470Ω 20% 0,5W

5503	4822 146 10419	Mainsfilter

6501	4822 130 34379	BZX79-B27
6503	4822 130 34379	BZX79-B27

+5V supply panel [C]

Various

	4822 265 10428	Pin strip
1050	4822 212 10544	+5V supply panel 1,6A
1050	4822 212 11212	+5V2 supply panel 2,5A
1050	4822 212 11215	+5V2 supply panel 2,1A

2504	5322 126 10184	680pF 5% 50V
2505	4822 124 11951	470µF 20% 35V
2505	4822 124 41716	220µF 20% 35V
2507Δ	4822 126 10002	100nF 20% 25V
2507Δ	5322 122 32654	22nF 10% 63V
2508	4822 126 13833	150nF 16V
2509Δ	4822 122 33177	10nF 20% 50V
2509	4822 126 13833	150nF 16V
2510Δ	4822 126 10002	100nF 20% 25V
2520Δ	5322 122 32654	22nF 10% 63V
2521Δ	5322 122 34123	1nF 10% 50V
2530	5322 124 41468	1000µF 20% 40V

3501Δ	4822 051 20332	3k3 5% 0,1W
3501	4822 051 20822	8k2 5% 0,1W
3502	4822 117 10833	10k 1% 0,1W
3503Δ	4822 051 20472	4k7 5% 0,1W
3503	4822 117 10833	10k 1% 0,1W
3504	4822 051 10102	1k 2% 0,25W
3505	4822 051 20228	2Ω2 5% 0,1W
3505	4822 051 20478	4Ω7 5% 0,1W
3507	4822 051 20104	100k 5% 0,1W
3508	4822 117 10834	47k 1% 0,1W
3509	4822 116 83933	15k 1% 0,1W
3510Δ	4822 051 20108	1Ω 5% 0,1W
3511Δ	4822 051 20108	1Ω 5% 0,1W
3512Δ	4822 051 20108	1Ω 5% 0,1W
3513Δ	4822 051 20108	1Ω 5% 0,1W
3514Δ	4822 051 20108	1Ω 5% 0,1W
3515Δ	4822 051 20108	1Ω 5% 0,1W
3516Δ	4822 051 20108	1Ω 5% 0,1W
3517Δ	4822 051 20108	1Ω 5% 0,1W
3518Δ	4822 051 20108	1Ω 5% 0,1W
3519Δ	4822 051 20108	1Ω 5% 0,1W
3520	4822 051 10102	1k 2% 0,25W
3520	4822 117 11449	2k2 1% 0,1W
3521	4822 051 20124	120k 5% 0,1W
3521	4822 051 20184	180k 5% 0,1W
3521	4822 051 20474	470k 5% 0,1W
3523Δ	4822 051 20108	1Ω 5% 0,1W
3524Δ	4822 051 20108	1Ω 5% 0,1W
3525Δ	4822 051 20108	1Ω 5% 0,1W
3526Δ	4822 051 20108	1Ω 5% 0,1W
3527Δ	4822 051 20108	1Ω 5% 0,1W
3528Δ	4822 051 20108	1Ω 5% 0,1W
3529Δ	4822 051 20108	1Ω 5% 0,1W
3530Δ	4822 051 20108	1Ω 5% 0,1W
3531Δ	4822 051 20108	1Ω 5% 0,1W
3532Δ	4822 051 20108	1Ω 5% 0,1W
3533Δ	4822 051 20108	1Ω 5% 0,1W
3534Δ	4822 051 20108	1Ω 5% 0,1W
3535Δ	4822 051 20108	1Ω 5% 0,1W

5505	4822 157 71457	33µH 10%
5508	4822 157 71466	2,220% 8X10
5520	4822 146 10741	5V regulator coil 2,1A/2,5A
5520	4822 157 10305	5V regulator coil 1,6A
	4822 157 63506	Ferrite bead

6501	4822 130 80125	BZX84-C5V6
6501	5322 130 80212	BZX84-C18
6510Δ	4822 130 30621	1N4148
6510Δ	4822 130 31983	BAT85
6520	5322 130 32677	1N5822
6521	4822 130 83801	PBYR745F

7502	4822 130 60511	BC847B
7503	4822 130 60511	BC847B
7508	4822 209 12728	MC34163P

DDP (geometry) panel [D]

Various

	4822 265 51383	22P pin strip
1013	4822 212 10547	DDP panel
1310	5322 242 73686	Crystal 12,00 MHz

2304Δ	4822 124 41579	10µF 20% 50V
2306	4822 124 40242	1µF 20% 63V
2308	5322 122 32658	22pF 5% 50V
2309	5322 122 32658	22pF 5% 50V
2310	4822 126 13561	220nF 10% 16V
2312	4822 126 13692	47pF 1% 63V
2315Δ	4822 126 10002	100nF 20% 25V
2316Δ	4822 126 10002	100nF 20% 25V
2317Δ	4822 126 10002	100nF 20% 25V
2318	4822 124 40242	1µF 20% 63V
2319	4822 122 33575	220pF 5% 50V
2320	5322 116 80853	560pF 5% 63V
2321Δ	4822 126 10002	100nF 20% 25V
2326Δ	4822 126 10002	100nF 20% 25V
2327	4822 126 13473	220nF 80-20% 50V
2330	4822 122 32535	680pF 10% 63V
2331	4822 126 13473	220nF 80-20% 50V
2334Δ	4822 122 33177	10nF 20% 50V
2337Δ	4822 126 10002	100nF 20% 25V
2338Δ	4822 122 33177	10nF 20% 50V
2343	4822 126 13561	220nF 10% 16V
2344	4822 126 13561	220nF 10% 16V
2345Δ	4822 126 10002	100nF 20% 25V
2346	4822 126 13694	68pF 1% 63V
2347	4822 126 13296	100nF 10% 16V
2348	5322 122 32658	22pF 5% 50V
2349	4822 126 13692	47pF 1% 63V
2354	4822 124 41584	100µF 20% 10V
2355	4822 124 41584	100µF 20% 10V
2357	4822 124 41584	100µF 20% 10V
2359	4822 124 81029	100µF 20% 25V
2360	4822 126 13692	47pF 1% 63V
2362Δ	4822 122 33177	10nF 20% 50V
2371Δ	4822 124 40246	4,7µF 20% 63V
2372	4822 126 13561	220nF 10% 16V
2390	5322 122 34099	470pF 10% 63V
2391Δ	4822 126 10002	100nF 20% 25V
2392	4822 126 13561	220nF 10% 16V

3305	4822 050 11002	1k 1% 0,4W
3306	4822 051 20333	33k 5% 0,1W
3307	4822 117 11449	2k2 1% 0,1W
3308	4822 050 11002	1k 1% 0,4W
3310	4822 051 20105	1M 5% 0,1W
3311	4822 050 11002	1k 1% 0,4W
3312	4822 116 52269	3k3 5% 0,5W
3314	4822 116 52175	100Ω 5% 0,5W
3315	4822 116 52175	100Ω 5% 0,5W
3316	4822 117 10833	10k 1% 0,1W
3317	4822 051 10102	1k 2% 0,25W
3318	4822 051 10102	1k 2% 0,25W
3319	4822 117 11449	2k2 1% 0,1W
3320	4822 051 20391	390Ω 5% 0,1W
3323	4822 117 10833	10k 1% 0,1W
3324Δ	4822 051 20101	100Ω 5% 0,1W
3326	4822 116 52235	1M 5% 0,5W
3327	4822 116 52285	470k 5% 0,5W
3328	4822 117 10834	47k 1% 0,1W
3329	4822 116 52305	820k 5% 0,5W
3330	4822 116 83864	10k 5% 0,5W
3331	4822 051 20474	470k 5% 0,1W
3332	4822 116 52175	100Ω 5% 0,5W
3333	4822 117 10834	47k 1% 0,1W
3334	4822 117 10834	47k 1% 0,1W
3336	4822 116 52283	4k7 5% 0,5W
3337	4822 051 10102	1k 2% 0,25W
3338	4822 051 20122	1k2 5% 0,1W
3339	4822 116 52228	680Ω 5% 0,5W
3341	4822 051 20391	390Ω 5% 0,1W
3342	4822 117 11139	1k5 1% 0,1W
3343	4822 050 23601	360Ω 1% 0,6W
3344	4822 050 23601	360Ω 1% 0,6W
3345Δ	4822 050 21002	1k 1% 0,6W
3346Δ	4822 050 21002	1k 1% 0,6W
3347Δ	4822 051 20229	22Ω 5% 0,1W
3351	4822 051 10102	1k 2% 0,25W
3352Δ	4822 051 20332	3k3 5% 0,1W
3353Δ	4822 052 10338	3Ω3 5% 0,33W
3357Δ	4822 052 10129	12Ω 5% 0,33W
3359	4822 050 11002	1k 1% 0,4W
3360	4822 051 20273	27k 5% 0,1W
3361	4822 051 20274	270k 5% 0,1W
3363	4822 116 52252	180k 5% 0,5W
3364	4822 051 20273	27k 5% 0,1W
3371	4822 117 10834	47k 1% 0,1W
3372	4822 051 20824	820k 5% 0,1W
3386	4822 116 52238	12k 5% 0,5W
3387	4822 051 10102	1k 2% 0,25W
3388	4822 051 20339	33Ω 5% 0,1W
3389	4822 051 20334	330k 5% 0,1W
3390	4822 051 20104	100k 5% 0,1W
3391	4822 117 10833	10k 1% 0,1W
3392Δ	4822 051 20472	4k7 5% 0,1W
3396	4822 116 52305	820k 5% 0,5W
3397	4822 051 20154	150k 5% 0,1W
3999	4822 051 20479	47Ω 5% 0,1W
4xxx	4822 051 10008	0Ω 5% 0,25W (1206)
4xxx	4822 051 20008	0Ω 5% 0,25W (0805)

5316Δ	4822 157 51462	10µH 10%
5353Δ	4822 158 10604	6,8 µH 10%
5354Δ	4822 158 10604	6,8 µH 10%

6306	4822 130 34441	BZX79-B22
6307Δ	4822 130 34173	BZX79-B5V6
6316Δ	4822 130 30621	1N4148
6318Δ	4822 130 30621	1N4148
6320Δ	4822 130 30621	1N4148
6321Δ	4822 130 30621	1N4148
6322Δ	4822 130 30621	1N4148
6323Δ	4822 130 30621	1N4148
6334Δ	4822 130 30621	1N4148
6359Δ	4822 130 30621	1N4148
6362Δ	4822 130 30621	1N4148
6363Δ	4822 130 30621	1N4148
6365Δ	4822 130 30621	1N4148
6371Δ	4822 130 30621	1N4148
6390Δ	4822 130 30621	1N4148
6391	4822 130 34145	BZX79-B39
6393Δ	4822 130 30621	1N4148
6394Δ	4822 130 30621	1N4148

7306	4822 130 42513	BC858C
7307	4822 130 42513	BC858C
7308Δ	5322 130 41982	BC848B
7315	4822 209 90038	TDA9155/N6A
7320Δ	5322 130 41982	BC848B
7335	5322 209 61487	LM358N
7342Δ	5322 130 41982	BC848B
7360	5322 209 61487	LM358N
7371	4822 130 42513	BC858C
7390	4822 130 42513	BC858C
7391	5322 130 42136	BC848C
7392	4822 130 42513	BC858C

Picture tube + SCAVEM panel [E]

Various

0041	4822 492 70788	Spring fix IC
0299Δ	4822 255 70305	Socket for CRT 24"/25"/28"/29"
0299Δ	4822 267 51249	Socket for CRT 32"
0324	4822 267 10916	6P male v
0335	4822 267 10915	2P male v
0340	4822 265 41451	9P male v 1,25
1030	4822 212 11785	PTP POLYGUN MD2.25
1030	4822 212 11786	PTP + SCAVEM MD2.25

2325Δ	4822 124 40246	4,7µF 20% 63V
2330	5322 122 32658	22pF 5% 50V
2332Δ	5322 126 10223	4,7nF 10% 63V
2333	4822 122 33891	3,3nF 10% 63V
2336	4822 126 12105	33nF 5% 63V
2337	4822 121 42068	33 nF 10% 400V
2340	5322 122 32658	22pF 5% 50V
2341	5322 122 32287	4,7pF 5% 50V
2342Δ	5322 126 10223	4,7nF 10% 63V

2343	4822 122 33891	3,3nF 10% 63V
2346	4822 126 12105	33nF 5% 63V
2347	4822 121 42068	33 nF 10% 400V
2350	5322 122 32658	22pF 5% 50V
2351	5322 122 32287	4,7pF 5% 50V
2352Δ	5322 126 10223	4,7nF 10% 63V
2353	4822 122 33891	3,3nF 10% 63V
2356	4822 126 12105	33nF 5% 63V
2357	4822 121 42068	33 nF 10% 400V
2360	4822 126 13691	27pF 1% 63V
2370	4822 124 23494	10µF 20% 250V
2372	4822 124 41643	100µF 20% 16V
2381	4822 122 31175	1nF 10% 500V
2393Δ	4822 122 33177	10nF 20% 50V
2397Δ	4822 126 12274	1500pF 10%) 2KV
2400	4822 124 41643	100µF 20% 16V
2401	4822 126 13486	15pF 2% 63V
2402	4822 126 13689	18pF 1% 63V
2403	5322 122 32658	22pF 5% 50V
2404Δ	4822 124 40433	47µF 20% 25V
2405	5322 122 32286	3,3pF 5% 50V
2406Δ	4822 126 10002	100nF 20% 25V
2407	5322 122 31863	330pF 5% 50V
2409	5322 121 42578	100nF 5% 250V
2410Δ	5322 122 32654	22nF 10% 63V
2411	4822 124 40764	22µF 100 V
2412	4822 126 11308	47pF 5% 500V
2420	4822 121 41856	22nF 5% 250V

3324	4822 117 11503	220Ω 1% 0.1W
3325	4822 051 10102	1k 2% 0,25W
3328	4822 117 10834	47k 1% 0,1W
3330	4822 117 11141	1k8 1% 0,1W
3331	4822 050 21204	120k 1% 0,6W
3332	4822 117 12955	2k7 1% 0,1W 0805
3333Δ	4822 051 20008	0Ω jumper . (0805)
3334	4822 116 52175	100Ω 5% 0,5W
3335	4822 117 12516	680Ω 2%0,5W
3336Δ	4822 051 20008	0Ω jumper . (0805)
3339	4822 050 11002	1k 1% 0,4W
3340	4822 117 11141	1k8 1% 0,1W
3341	4822 050 21204	120k 1% 0,6W
3342	4822 117 12955	2k7 1% 0,1W 0805
3343Δ	4822 051 20008	0Ω jumper . (0805)
3344	4822 116 52175	100Ω 5% 0,5W
3345	4822 117 12516	680Ω 2%0,5W
3346	4822 051 20391	390Ω 5% 0,1W
3349	4822 050 11002	1k 1% 0,4W
3350	4822 117 11141	1k8 1% 0,1W
3351	4822 050 21204	120k 1% 0,6W
3352	4822 117 12955	2k7 1% 0,1W 0805
3353Δ	4822 051 20008	0Ω jumper . (0805)
3354	4822 116 52175	100Ω 5% 0,5W
3355	4822 117 12516	680Ω 2%0,5W
3356	4822 116 83881	390Ω 5% 0,5W
3359	4822 050 11002	1k 1% 0,4W
3360	4822 050 11002	1k 1% 0,4W
3361	4822 117 11149	82k 1% 0,1W
3362	4822 116 52239	120k 5% 0,5W
3363	4822 117 10834	47k 1% 0,1W
3364	4822 117 10834	47k 1% 0,1W
3372Δ	4822 052 10688	6Ω8 5% 0,33W
3373Δ	4822 052 10331	330Ω 5% 0,33W
3380Δ	4822 052 10108	1Ω 5% 0,33W
3381Δ	4822 052 10151	150Ω 5% 0,33W
3382	4822 116 52191	33Ω 5% 0,5W
3383	4822 117 13016	1M A/50V MAX 115V
3385	4822 117 13016	1M A/50V MAX 115V
3386	4822 116 52191	33Ω 5% 0,5W
3387Δ	4822 052 10108	1Ω 5% 0,33W
3392	4822 116 52255	200k 5% 0,5W
3393	4822 116 52238	12k 5% 0,5W
3396	4822 116 52175	100Ω 5% 0,5W
3397	4822 117 11896	1k5 20% 0,5W
3400Δ	4822 052 10109	10Ω 5% 0,33W
3401Δ	4822 051 20332	3k3 5% 0,1W
3402	4822 117 12955	2k7 1% 0,1W 0805
3403	4822 117 11449	2k2 1% 0,1W
3404Δ	4822 051 20121	120Ω 5% 0,1W
3405	4822 117 10965	18k 1% 0,1W
3406	4822 117 11449	2k2 1% 0,1W
3407	4822 116 83872	220Ω 5% 0,5W
3408	4822 051 20479	47Ω 5% 0,1W
3409	4822 051 20478	4Ω7 5% 0,1W
3410	4822 051 10102	1k 2% 0,25W
3411	4822 117 11148	56k 1% 0,1W
3412	4822 117 11148	56k 1% 0,1W
3413	4822 051 10102	1k 2% 0,25W
3414	4822 053 12472	4k7 5% 3W
3415Δ	4822 051 20109	10Ω 5% 0,1W
3416	4822 117 11449	2k2 1% 0,1W
3417Δ	4822 051 20109	10Ω 5% 0,1W
3418	4822 051 20331	330Ω 5% 0,1W
3419	4822 116 83872	220Ω 5% 0,5W
3420	4822 116 52176	10Ω 5% 0,5W
3999	4822 051 20561	560Ω 5% 0,1W
3999	4822 051 20681	680Ω 5% 0,1W
9336	4822 116 83881	390R 5% 0,5W
4xxx	4822 051 10008	0Ω 5% 0,25W (1206)
4xxx	4822 051 20008	0Ω 5% 0,25W (0805)

5346	4822 157 60123	6,8µH 10%
5356	4822 157 60123	6,8µH 10%
5372	4822 157 51216	5,6µH 10%
5373	4822 157 51216	5,6µH 10%
5380	4822 157 71452	18µH 10%
5381	4822 157 71452	18µH 10%
5400	4822 157 51216	5,6µH 10%
5414	4822 157 11181	HF-CM current filter

6325	4822 130 32831	HZ3B2
6335	4822 130 30842	BAV21
6345	4822 130 30842	BAV21
6355	4822 130 30842	BAV21
6409Δ	4822 130 30621	1N4148
6410Δ	4822 130 30621	1N4148

7324	5322 130 60508	BC857B
7330	4822 209 33365	TDA6111Q/N4
7340	4822 209 33365	TDA6111Q/N4
7350	4822 209 33365	TDA6111Q/N4
7400	4822 130 44154	BF199
7405	4822 130 42589	BF370
7414	5322 130 41888	BD140-16
7415	5322 130 41886	BD139-16
8025	4822 320 12435	Cable 6P 410mm
8031	4822 320 12436	Cable 3P 220mm

North/South panel [F2]

Various

Δ	4822 265 10429	Pin strip 4P
	4822 265 20509	2P male v grey
1091	4822 212 11287	N/S + frame rotation

2052	4822 124 40242	1µF 20% 50V
2053	4822 121 41856	22µF 10% 50V

3051	4822 116 52175	100Ω 5% 0,5W
3052	4822 116 52175	100Ω 5% 0,5W
3053	4822 117 10834	47k 1% 0,1W
3054	4822 117 10834	47k 1% 0,1W
3055	4822 117 10834	47k 1% 0,1W
3056	4822 051 20104	100k 5% 0,1W
3057	4822 051 20393	39k 5% 0,1W
3058	4822 051 20104	100k 5% 0,1W
3059	4822 051 20393	39k 5% 0,1W
3060	4822 116 52222	390Ω 5% 0,5W
3061	4822 051 20104	100k 5% 0,1W
3062	4822 051 20104	100k 5% 0,1W
3063	4822 117 10833	10k 1% 0,1W
3064	4822 051 20393	39k 5% 0,1W
3065	4822 051 20393	39k 5% 0,1W
3066	4822 117 10834	47k 1% 0,1W
3067	4822 117 10833	10k 1% 0,1W
3068	4822 117 10834	47k 1% 0,1W
3069	4822 051 20273	27k 5% 0,1W
3070	4822 051 20223	22k 5% 0,1W
3072	4822 117 10834	47k 1% 0,1W
3073	4822 050 11002	1k 1% 0,4W
3074	4822 116 52195	47Ω 5% 0,5W
3075	4822 116 52195	47Ω 5% 0,5W

6051Δ	4822 130 34197	BZX79-B12
6052Δ	4822 130 34197	BZX79-B12
6053Δ	4822 130 34173	BZX79-B5V6
6061Δ	4822 130 10852	BZX79-C6V8
6062Δ	4822 130 10852	BZX79-C6V8

7050	4822 209 63896	PCF8574AP
7051	5322 130 42136	BC848C
7052	5322 130 42136	BC848C
7053	5322 130 42136	BC848C
7054	4822 130 42513	BC858C
7055	4822 130 42513	BC858C
7056	5322 130 42136	BC848C
7057	4822 130 42513	BC858C
7058	4822 130 42513	BC858C
7059	5322 130 42136	BC848C
7060	5322 130 42136	BC848C
7061	5322 130 42136	BC848C
7062	5322 130 42136	BC848C

External DC-shift panel [G2]

Various

	4822 265 20712	8P male
	4822 267 10911	4P male v
1500	4822 212 11482	DC-SHIFT panel

2030	4822 122 31177	470pF 10% 500V
2031	4822 124 41643	100µF 20% 16V
2032	4822 124 41643	100µF 20% 16V
2033	4822 122 31177	470pF 10% 500V

3030Δ	4822 053 11689	68Ω 5% 2W
3031Δ	4822 052 10108	1Ω 5% 0,33W
3032Δ	4822 052 10108	1Ω 5% 0,33W

5030Δ	4822 157 70006	DC-shift coil

6030	4822 130 42488	BYD33D
6033	4822 130 42488	BYD33D

Surround sound panel [H1]

Various

Δ	4822 492 62076	Spring fix trans.
	4822 267 10916	6P male v
	4822 267 10915	2P male v
Δ	4822 265 31251	5P male v 1,,25
	4822 267 10753	4P B04B-EHP4
1500	4822 212 11547	Surround sound panel

2750	4822 124 40242	1µF 20% 63V
2754	5322 121 42386	100nF 5% 63V
2755	4822 124 41329	2200µF 20% 35V
2756	4822 124 81151	22µF 50V
2757Δ	4822 124 41579	10µF 20% 50V
2758Δ	4822 124 41579	10µF 20% 50V
2761	4822 121 42408	220nF 5% 63V
2762	4822 121 42408	220nF 5% 63V
2763	5322 122 32331	1nF 10% 100V
2764	4822 122 30043	10nF 80% 63V
2765	4822 124 41069	47µF 20% 63V
2766	5322 124 41468	1000µF 20% 40V
2776	4822 122 30057	2,7nF 10% 100V
2778	4822 122 30057	2,7nF 10% 100V
2787Δ	4822 122 30103	22nF 80% 63V
2788Δ	4822 122 30103	22nF 80% 63V

3750	4822 053 11188	1Ω8 5% 2W
3752Δ	4822 052 10828	8Ω2 5% 0,33W
3753Δ	4822 052 10828	8Ω2 5% 0,33W
3760	4822 116 52276	3k9 5% 0,5W
3761	4822 116 52283	4k7 5% 0,5W
3762	4822 116 52276	3k9 5% 0,5W
3763	4822 116 52228	680Ω 5% 0,5W
3764	4822 116 52283	4k7 5% 0,5W
3770	4822 116 52251	18k 5% 0,5W
3771	4822 116 83872	220Ω 5% 0,5W
3772	4822 116 83864	10k 5% 0,5W

6770Δ	4822 130 30621	1N4148

7761	4822 209 32641	TDA2616Q
7770	4822 130 44568	BC557B

Clickfit panel [H2]

Various

	4822 267 10914	4P male v
	4822 267 10915	2P male v
	4822 265 31248	3P DUO 1,25
	4822 267 10753	4P B04B-EHP4
	4822 265 31242	2P male v
	4822 267 10915	2P male v
	4822 267 10914	4P male v
	4822 276 13094	Switch loudsp. ON/OFF
	4822 290 61196	Socket for ext. loudsp.
1052	4822 212 11548	Clickfit panel cordless
1052	4822 212 11549	Clickfit panel non cordless

2702	5322 122 32331	1nF 10% 100V
2705Δ	4822 122 30103	22nF 80% 63V
2706Δ	4822 122 30103	22nF 80% 63V
2707Δ	4822 122 30103	22nF 80% 63V
2708Δ	4822 122 30103	22nF 80% 63V
2709	5322 122 32331	1nF 10% 100V

3701	4822 116 83864	10k 5% 0,5W
3702	4822 116 83864	10k 5% 0,5W
3703	4822 116 83864	10k 5% 0,5W
3704	4822 116 83864	10k 5% 0,5W
3998	4822 050 11002	1k 1% 0,4W

5701	4822 157 71097	0.56µH 20%
5702	4822 157 71097	0.56µH 20%
5703	4822 157 71097	0.56µH 20%
5704	4822 157 71097	0.56µH 20%

DBE panel [I]

Various

	4822 265 10431	Pin strip
	4822 265 31248	3P male v 1,25
1020	4822 212 10591	DBE panel subwoofer
1020	4822 212 10803	DBE panel subwoofer Dolby

2759Δ	4822 124 41579	10µF 20% 50V
2760Δ	4822 124 41579	10µF 20% 50V
2761Δ	4822 124 41579	10µF 20% 50V
2762Δ	4822 126 10002	100nF 20% 25V
2763Δ	4822 124 41579	10µF 20% 50V
2766	5322 122 31865	1,5nF 10% 63V
2767	5322 122 31865	1,5nF 10% 63V
2769	4822 121 43396	120nF 5% 63V
2770	4822 124 22466	1µF 20% 50V
2775	5322 126 10465	3,9nF 10% 50V
2776Δ	4822 122 33893	18nF 10% 63V
2777	5322 122 34099	470pF 10% 63V
2779Δ	4822 126 10002	100nF 20% 25V
2780	4822 122 33175	2,2nF 20% 50V
2781	4822 122 33175	2,2nF 20% 50V
2783	5322 126 10465	3,9nF 10% 50V
2784	4822 121 43396	120nF 5% 63V
2785	4822 124 22466	1µF 20% 50V
2788Δ	4822 122 33893	18nF 10% 63V
2789Δ	4822 126 10002	100nF 20% 25V
2790	5322 122 34099	470pF 10% 63V
2798	4822 124 40849	330µF 20% 16V
2799	4822 124 41643	100µF 20% 16V

3752	4822 051 10101	100Ω 2% 0,25W
3753	4822 051 10101	100Ω 2% 0,25W
3754	4822 051 10101	100Ω 2% 0,25W
3755	4822 051 20223	22k 5% 0,1W
3756Δ	4822 051 20332	3k3 5% 0,1W
3757	4822 051 20562	5k6 5% 0,1W 0805
3758	4822 051 20104	100k 5% 0,1W
3759	4822 117 11148	56k 1% 0,1W
3761	4822 051 20104	100k 5% 0,1W
3762	4822 051 20104	100k 5% 0,1W

3764	4822 117 10833	10k 1% 0,1W
3765	4822 051 20104	100k 5% 0,1W
3766	4822 116 52175	100Ω 5% 0,5W
3767	4822 116 52175	100Ω 5% 0,5W
3769Δ	4822 051 20471	470Ω 5% 0,1W
3770	4822 051 20104	100k 5% 0,1W
3771Δ	4822 051 20471	470Ω 5% 0,1W
3772	4822 051 20393	39k 5% 0,1W
3773	4822 117 11148	56k 1% 0,1W
3774	4822 117 11148	56k 1% 0,1W
3775	4822 117 11454	820Ω 1% 0,1W
3776Δ	4822 051 20101	100Ω 5% 0,1W
3777	4822 051 20683	68k 5% 0,1W
3778	4822 051 10102	1k 2% 0,25W
3779Δ	4822 051 20332	3k3 5% 0,1W
3780	4822 117 11448	180Ω 1% 0,1W
3781	4822 117 11448	180Ω 1% 0,1W
3782	4822 116 52213	180Ω 5% 0,5W
3783	4822 117 11448	180Ω 1% 0,1W
3784Δ	4822 051 20471	470Ω 5% 0,1W
3785	4822 051 20104	100k 5% 0,1W
3786Δ	4822 051 20471	470Ω 5% 0,1W
3787	4822 051 20393	39k 5% 0,1W
3788	4822 117 11148	56k 1% 0,1W
3789	4822 117 11148	56k 1% 0,1W
3790	4822 117 11454	820Ω 1% 0,1W
3791Δ	4822 051 20101	100Ω 5% 0,1W
3792	4822 051 20683	68k 5% 0,1W
3793	4822 051 10102	1k 2% 0,25W
3794Δ	4822 051 20332	3k3 5% 0,1W
3795	4822 117 10833	10k 1% 0,1W
3796	4822 117 10833	10k 1% 0,1W
3798Δ	4822 051 20332	3k3 5% 0,1W
3799Δ	4822 051 20332	3k3 5% 0,1W
3999	4822 051 20279	27Ω 5% 0,1W
3999	4822 051 20479	47Ω 5% 0,1W

6775Δ	4822 130 30621	1N4148
6790Δ	4822 130 30621	1N4148

7770Δ	5322 130 41982	BC848B
7771Δ	5322 130 41982	BC848B
7772	4822 209 30095	LM833D
7773Δ	5322 130 41982	BC848B
7774	5322 209 14481	HEF4053BT
7780Δ	5322 130 41982	BC848B
7787	4822 209 30095	LM833D

TXT & control panel [J1] [J2] [J3]

Various

0056	4822 265 10877	Pinstrip
0201	4822 267 50887	IC socket 8P
0202	4822 267 70255	IC socket 32P
1130	4822 212 11651	TXT WE EPG DW 97+
1130	4822 212 11652	TXT WE EPG NDW 97+
1130	4822 212 11653	TXT WE NEPG DW 97+
1130	4822 212 11654	TXT WE NEPG NDW 97+
1130	4822 212 11655	TXT WE NEPG DW 97+
1130	4822 212 11656	TXT WE NEPG NDW 97+
1200	4822 242 10469	Crystal 24 MHz (overtune)
1201	4822 242 81191	Crystal 27 MHz

2200Δ	4822 124 41579	10µF 20% 50V
2201	4822 124 41584	100µF 20% 10V
2202Δ	4822 126 10002	100nF 20% 25V
2203Δ	4822 126 10002	100nF 20% 25V
2204	4822 126 13689	18pF 1% 63V
2205	4822 126 13689	18pF 1% 63V
2206Δ	4822 126 10002	100nF 20% 25V
2207Δ	4822 126 10002	100nF 20% 25V
2208Δ	4822 126 10002	100nF 20% 25V
2209	4822 124 40242	1µF 20% 63V
2210Δ	5322 122 34123	1nF 10% 50V
2220	4822 122 31797	22nF 10% 63V
2430	4822 126 11692	1µF 20% 16V
2435	5322 122 32658	22pF 5% 50V
2436	5322 122 32658	22pF 5% 50V
2437	5322 122 32658	22pF 5% 50V
2438	4822 122 32139	12pF 2% 63V
2441	5322 122 32658	22pF 5% 50V
2442	5322 122 32658	22pF 5% 50V
2451Δ	4822 126 10002	100nF 20% 25V
2452Δ	4822 126 10002	100nF 20% 25V
2453	4822 126 11692	1µF 20% 16V
2454	4822 124 41584	100µF 20% 10V
2455	4822 124 41584	100µF 20% 10V
2459	4822 124 41584	100µF 20% 10V
2461Δ	4822 126 10002	100nF 20% 25V
2462	5322 122 32531	100pF 5% 50V
2463	5322 122 32658	22pF 5% 50V
2464	4822 126 11692	1µF 20% 16V
2465	5322 122 32658	22pF 5% 50V
2466Δ	4822 122 33177	10nF 20% 50V
2468Δ	4822 126 10002	100nF 20% 25V
2469Δ	4822 126 10002	100nF 20% 25V
2472	4822 126 11692	1µF 20% 16V
2474	4822 126 11692	1µF 20% 16V
2475	4822 126 11692	1µF 20% 16V
2476	4822 126 11692	1µF 20% 16V
2477	4822 126 11692	1µF 20% 16V
2478	4822 122 33805	330pF 10% 63V
2479	4822 126 11692	1µF 20% 16V
2480	5322 122 32967	5,6pF 10% 63V
2481	4822 122 33797	47nF 20% 50V
2482	4822 122 33797	47nF 20% 50V
2483	4822 122 33797	47nF 20% 50V
2484	4822 122 33797	47nF 20% 50V
2485	4822 122 33797	47nF 20% 50V
2486	4822 122 33797	47nF 20% 50V
2487	5322 122 32966	39pF 5% 50V
2488Δ	4822 051 20008	0R00 JUMP. ()

3200Δ	4822 051 20471	470Ω 5% 0,1W
3201	4822 051 20331	330Ω 5% 0,1W
3202	4822 117 11148	56k 1% 0,1W
3203	4822 051 20822	8k2 5% 0,1W
3204	4822 051 20822	8k2 5% 0,1W
3205	4822 117 10834	47k 1% 0,1W
3206Δ	4822 051 20332	3k3 5% 0,1W
3207	4822 117 10833	10k 1% 0,1W
3208Δ	4822 051 20472	4k7 5% 0,1W
3209Δ	4822 051 20472	4k7 5% 0,1W
3214Δ	4822 051 20472	4k7 5% 0,1W
3215	4822 051 20474	470k 5% 0,1W
3216	4822 117 10833	10k 1% 0,1W
3218	4822 051 10102	1k 2% 0,25W
3219Δ	4822 051 20472	4k7 5% 0,1W
3220	4822 051 10102	1k 2% 0,25W
3221	4822 117 11448	180Ω 1% 0,1W
3222	4822 051 10102	1k 2% 0,25W
3223	4822 117 11503	220Ω 1% 0.1W
3224	4822 117 11504	270Ω 1% 0.1W
3225	4822 117 10833	10k 1% 0,1W
3230	4822 051 20393	39k 5% 0,1W
3231	4822 051 20223	22k 5% 0,1W
3232Δ	4822 051 20472	4k7 5% 0,1W
3236	4822 051 10102	1k 2% 0,25W
3237	4822 051 10102	1k 2% 0,25W
3238	4822 051 10102	1k 2% 0,25W
3239	4822 051 10102	1k 2% 0,25W
3240	4822 117 11503	220Ω 1% 0.1W
3241	4822 117 10833	10k 1% 0,1W
3242	4822 117 11503	220Ω 1% 0.1W
3243Δ	4822 051 20101	100Ω 5% 0,1W
3250	4822 117 11503	220Ω 1% 0.1W
3251	4822 117 11503	220Ω 1% 0.1W
3252	4822 117 11503	220Ω 1% 0.1W
3253	4822 117 11503	220Ω 1% 0.1W
3254	4822 117 11503	220Ω 1% 0.1W
3255	4822 051 10102	1k 2% 0,25W
3256	4822 117 11503	220Ω 1% 0.1W
3410	4822 051 20391	390Ω 5% 0,1W
3411	4822 051 20331	330Ω 5% 0,1W
3412	4822 051 20391	390Ω 5% 0,1W
3413	4822 051 20331	330Ω 5% 0,1W
3414	4822 051 20391	390Ω 5% 0,1W
3415	4822 051 20331	330Ω 5% 0,1W
3416	4822 051 10102	1k 2% 0,25W
3417	4822 117 11448	180Ω 1% 0,1W
3418	4822 051 10102	1k 2% 0,25W
3419	4822 117 11448	180Ω 1% 0,1W
3420	4822 051 10102	1k 2% 0,25W
3421	4822 117 11448	180Ω 1% 0,1W
3422Δ	4822 051 20101	100Ω 5% 0,1W
3423Δ	4822 051 20101	100Ω 5% 0,1W
3430Δ	4822 051 20108	1Ω 5% 0,1W
3431Δ	4822 051 20109	10Ω 5% 0,1W
3432	4822 051 20159	15Ω 5% 0,1W
3433	4822 051 20159	15Ω 5% 0,1W
3434	4822 051 20159	15Ω 5% 0,1W
3435	4822 051 20159	15Ω 5% 0,1W
3436	4822 051 20159	15Ω 5% 0,1W
3437Δ	4822 051 20101	100Ω 5% 0,1W
3438Δ	4822 051 20101	100Ω 5% 0,1W
3439Δ	4822 051 20101	100Ω 5% 0,1W
3440	4822 117 11139	1k5 1% 0,1W
3441	4822 117 11449	2k2 1% 0,1W
3442	4822 117 11449	2k2 1% 0,1W
3443	4822 051 20331	330Ω 5% 0,1W
3444	4822 051 20331	330Ω 5% 0,1W
3444	4822 117 11449	2k2 1% 0,1W
3445	5322 117 12487	1k 1% 0,125W
3446	4822 051 10102	1k 2% 0,25W
3447	4822 117 11449	2k2 1% 0,1W
3448	4822 117 10833	10k 1% 0,1W
3449Δ	4822 051 20472	4k7 5% 0,1W
3451	4822 051 20273	27k 5% 0,1W
3454	4822 117 11503	220Ω 1% 0.1W
3455	4822 117 10353	150Ω 1% 0,1W
3457	4822 117 10353	150Ω 1% 0,1W
3463	4822 117 11507	6k8 1% 0,1W
3464Δ	4822 051 20229	22Ω 5% 0,1W
3465	4822 051 10102	1k 2% 0,25W
3471	4822 051 20331	330Ω 5% 0,1W
3472Δ	4822 051 20121	120Ω 5% 0,1W
3473Δ	4822 051 20121	120Ω 5% 0,1W
3474Δ	4822 051 20121	120Ω 5% 0,1W
3475	4822 117 11448	180Ω 1% 0,1W
3476	4822 117 11448	180Ω 1% 0,1W
3477	4822 117 10353	150Ω 1% 0,1W
3478	4822 117 11454	820Ω 1% 0,1W
3479Δ	4822 051 20121	120Ω 5% 0,1W
3480	4822 051 10102	1k 2% 0,25W
3481Δ	4822 051 20101	100Ω 5% 0,1W
3482Δ	4822 051 20101	100Ω 5% 0,1W
3483Δ	4822 051 20472	4k7 5% 0,1W
3484Δ	4822 051 20101	100Ω 5% 0,1W
3485Δ	4822 051 20101	100Ω 5% 0,1W
3486Δ	4822 051 20472	4k7 5% 0,1W
3487	4822 051 10102	1k 2% 0,25W
3488Δ	4822 051 20101	100Ω 5% 0,1W
3488	4822 117 11504	270Ω 1% 0.1W
3489Δ	4822 051 20101	100Ω 5% 0,1W
3489	4822 117 11504	270Ω 1% 0.1W
3490Δ	4822 051 20101	100Ω 5% 0,1W
3490	4822 117 11504	270Ω 1% 0.1W
3491Δ	4822 051 20101	100Ω 5% 0,1W
3492	4822 051 10102	1k 2% 0,25W
3493Δ	4822 051 20101	100Ω 5% 0,1W
3494	4822 051 20339	33Ω 5% 0,1W
3495Δ	4822 051 20101	100Ω 5% 0,1W
3497	4822 117 10353	150Ω 1% 0,1W
3999Δ	4822 051 20153	15k 5% 0,1W
3999	4822 051 20223	22k 5% 0,1W
3999	4822 051 20273	27k 5% 0,1W
3999	4822 117 10833	10k 1% 0,1W
3999	4822 117 10965	18k 1% 0,1W
3999	4822 117 11383	12k 1% 0,1W
4xxx	4822 051 10008	0Ω 5% 0,25W (1206)
4xxx	4822 051 20008	0Ω 5% 0,25W (0805)

5200	4822 157 60147	2,2µH
5451	4822 157 60147	2,2µH
5452	4822 157 60147	2,2µH
5454	4822 157 53634	5,6µH 10%
5455	4822 157 60147	2,2µH
5460	4822 157 53302	1µH 20%
5461	4822 157 60147	2,2µH
5462	4822 157 60147	2,2µH
5463	4822 157 60147	2,2µH
5464	4822 157 53634	5,6µH 10%
5465	4822 157 71464	Coil trimm.
5466	4822 157 60147	2,2µH

6219	4822 130 80954	BZV55-C5V6
6220	4822 130 80954	BZV55-C5V6
6225	4822 130 80954	BZV55-C5V6
6227	4822 130 81139	BZV55-C3V3
6228	4822 130 80622	BAT54
6229	4822 130 80954	BZV55-C5V6
6230	4822 130 80954	BZV55-C5V6
6231	4822 130 80954	BZV55-C5V6
6233	4822 130 80954	BZV55-C5V6

7200	4822 209 90032	P90CE201AEB/02
7201	4822 209 33251	ST24C16CB6
7202	4822 900 11058	Software V_01020
7202	4822 900 11066	Software V_01040
7202	4822 900 11102	Software V_01030
7203	5322 209 61433	N74F00D
7204	4822 209 15336	M29F040-70XK6
7206	4822 209 15337	UM61512AM-25
7215	5322 130 60508	BC857B
7216Δ	4822 209 73852	PMBT2369
7217	4822 130 60511	BC847B
7218	4822 130 60511	BC847B
7220	4822 130 60511	BC847B
7221	5322 130 42136	BC848C
7230	4822 130 60511	BC847B
7400	4822 209 15722	SAA5270WP/G/M5B
7400	4822 209 15723	SAA5270WP/H/M5B
7448	5322 130 60508	BC857B
7449Δ	4822 209 73852	PMBT2369
7453Δ	4822 209 73852	PMBT2369
7454Δ	4822 209 73852	PMBT2369
7455Δ	4822 209 73852	PMBT2369
7456	4822 130 42513	BC858C
7457	4822 130 42131	BF550
7458	4822 130 42131	BF550
7459	5322 130 42136	BC848C
7460Δ	4822 209 73852	PMBT2369
7461	5322 209 61001	N74F04D
7462	4822 209 60525	TMS4C1050-30N
7463	5322 209 61001	N74F04D
7464Δ	4822 209 90051	TDA8601/C1
7465	5322 209 61004	N74F74D
7466Δ	4822 209 73852	PMBT2369
7470	5322 130 34337	BAV99
7490	4822 209 90027	HYB514400BJ-70

Small Signal Panel [K]

Various

0132	4822 267 31987	Socket 2xcinch
0140	4822 265 10424	Socket SCART black
0141	4822 267 51058	Socket SCART blue
0252	4822 265 11383	IC socket 32P DIL
0310	4822 267 10925	10P male 2,5 EHP4
0340	4822 265 41451	9P male v 1,25 gy
0341Δ	4822 265 41462	7P male v 1,25 wh
0348	4822 265 41466	10P male 2,5
0351	4822 265 10787	11P male v 1,25 gy
0352Δ	4822 265 31251	5P male v 1,25 gy
0353	4822 265 10788	11P male v 1,25 bl
0365	4822 265 41467	12P male v 2,5
0398	4822 267 10926	Pin strip 3P
0399	4822 267 50885	IC socket 16P
8072	4822 320 11836	Cable 5P 40cm ED 1,25
8101	4822 320 11847	Cable 5P 56cm ED 1,25
8101	4822 321 63044	5P. 0.33 DUO 1.25
8102	4822 320 11838	Cable 15P 40cm ED 1,25
8104	4822 320 11858	Cable 11P 50cm ED 1,25
8407	4822 320 11837	Cable 16P
1005	4822 212 11765	Service SSP MD2.25
1100	4822 210 10691	UV916S
1352	4822 242 10697	Crystal 3,579545 MHz
1354	4822 242 10692	Crystal 4,433619 MHz
1600	4822 242 81002	Crystal 6,00 MHz

2001Δ	5322 122 32654	22nF 10% 63V
2004Δ	4822 126 10002	100nF 20% 25V
2009	4822 124 81029	100µF 20% 25V
2350Δ	5322 122 34123	1nF 10% 50V
2351	4822 126 13689	18pF 1% 63V
2352	5322 122 32659	33pF 5% 50V
2353Δ	5322 122 32654	22nF 10% 63V
2360	4822 126 13693	56pF 1% 63V
2361	4822 126 13693	56pF 1% 63V
2362Δ	4822 126 10002	100nF 20% 25V
2364Δ	4822 126 10002	100nF 20% 25V
2366Δ	4822 126 10002	100nF 20% 25V
2368	4822 121 51252	470nF 5% 63V
2370Δ	4822 122 32627	2.7nF 10% 50V
2371	4822 126 13693	56pF 1% 63V
2373	4822 126 13693	56pF 1% 63V
2376Δ	4822 126 10002	100nF 20% 25V
2378Δ	4822 126 10002	100nF 20% 25V
2379Δ	4822 126 10002	100nF 20% 25V
2380	4822 126 13296	100nF 10% 16V
2381Δ	4822 126 10002	100nF 20% 25V
2382Δ	4822 126 10002	100nF 20% 25V
2383Δ	4822 124 40433	47µF 20% 25V
2385Δ	4822 126 10002	100nF 20% 25V
2387Δ	4822 124 40433	47µF 20% 25V
2388	4822 126 13689	18pF 1% 63V
2390Δ	4822 126 10002	100nF 20% 25V
2391	4822 122 33175	2,2nF 20% 50V
2392Δ	4822 126 10002	100nF 20% 25V
2393Δ	4822 126 10002	100nF 20% 25V
2394Δ	4822 126 10002	100nF 20% 25V
2395Δ	4822 126 10002	100nF 20% 25V
2396Δ	4822 126 10002	100nF 20% 25V
2398	4822 126 13486	15pF 2% 63V
2400	4822 126 13473	220nF 80-20% 50V
2401	4822 121 42408	220nF 5% 63V
2402	4822 124 40756	1µF 20% 100V
2403	4822 126 13473	220nF 80-20% 50V
2404	4822 126 13473	220nF 80-20% 50V
2405	4822 126 13473	220nF 80-20% 50V
2406Δ	4822 126 10002	100nF 20% 25V
2407	5322 122 31863	330pF 5% 50V
2408	5322 122 31863	330pF 5% 50V
2409	5322 122 31863	330pF 5% 50V
2410	5322 122 31863	330pF 5% 50V
2411	5322 122 31863	330pF 5% 50V
2412	5322 122 31863	330pF 5% 50V
2413	5322 122 31863	330pF 5% 50V

2414	5322 122 31863	330pF 5% 50V
2415	5322 122 31863	330pF 5% 50V
2416	5322 122 31863	330pF 5% 50V
2417	5322 122 31863	330pF 5% 50V
2418	5322 122 31863	330pF 5% 50V
2420	5322 122 31863	330pF 5% 50V
2421	4822 126 13473	220nF 80-20% 50V
2422Δ	4822 124 40433	47µF 20% 25V
2423	5322 122 31863	330pF 5% 50V
2424	5322 122 31863	330pF 5% 50V
2425	4822 126 13473	220nF 80-20% 50V
2426	4822 126 13473	220nF 80-20% 50V
2427	4822 124 81151	22µF 20% 50V
2428	4822 124 81151	22µF 20% 50V
2429	4822 124 81151	22µF 20% 50V
2430	4822 124 81151	22µF 20% 50V
2431	4822 124 81151	22µF 20% 50V
2432	4822 124 81151	22µF 20% 50V
2434	4822 126 13473	220nF 80-20% 50V
2435	4822 126 13473	220nF 80-20% 50V
2436	4822 126 13473	220nF 80-20% 50V
2437	4822 126 13473	220nF 80-20% 50V
2438	4822 126 13473	220nF 80-20% 50V
2439	4822 126 13473	220nF 80-20% 50V
2440Δ	4822 124 40433	47µF 20% 25V
2441	4822 126 13473	220nF 80-20% 50V
2442Δ	4822 124 40433	47µF 20% 25V
2444Δ	4822 124 41579	10µF 20% 50V
2445	4822 126 13473	220nF 80-20% 50V
2446	5322 122 32531	100pF 5% 50V
2447Δ	4822 126 10002	100nF 20% 25V
2448	5322 122 32531	100pF 5% 50V
2449	5322 122 32531	100pF 5% 50V
2450Δ	4822 124 41579	10µF 20% 50V
2451Δ	4822 124 40196	220µF 20% 16V
2500Δ	4822 126 12944	47nF 10% 50V
2501	4822 124 81151	22µF 20% 50V
2502Δ	5322 122 32654	22nF 10% 63V
2504Δ	5322 122 32654	22nF 10% 63V
2505	4822 124 81151	22µF 20% 50V
2506	4822 121 41856	22nF 5% 250V
2508	4822 121 41856	22nF 5% 250V
2509	4822 124 81151	22µF 20% 50V
2510Δ	5322 122 32654	22nF 10% 63V
2512Δ	5322 122 32654	22nF 10% 63V
2514Δ	5322 122 32654	22nF 10% 63V
2516Δ	5322 122 32654	22nF 10% 63V
2517	5322 122 33861	120pF 10% 50V
2519Δ	5322 122 32654	22nF 10% 63V
2520Δ	5322 122 32654	22nF 10% 63V
2521Δ	5322 122 32654	22nF 10% 63V
2522	4822 122 33797	47nF 20% 50V
2523Δ	5322 122 32654	22nF 10% 63V
2524	4822 124 40242	1µF 20% 63V
2525	4822 126 13693	56pF 1% 63V
2526	4822 126 13693	56pF 1% 63V
2527	4822 126 13693	56pF 1% 63V
2532Δ	4822 124 40246	4,7µF 20% 63V
2533	4822 124 40849	330µF 20% 16V
2535	4822 126 14456	6nF 10% 50V
2536	4822 121 40434	330nF 10% 100V
2538	4822 126 13473	220nF 80-20% 50V
2540	4822 126 13473	220nF 80-20% 50V
2541	5322 122 32658	22pF 5% 50V
2542	4822 126 13473	220nF 80-20% 50V
2543	5322 122 32658	22pF 5% 50V
2544	4822 124 40242	1µF 20% 63V
2545	5322 122 32658	22pF 5% 50V
2546	4822 124 40242	1µF 20% 63V
2548Δ	4822 126 10002	100nF 20% 25V
2549	5322 122 32658	22pF 5% 50V
2604Δ	4822 126 10002	100nF 20% 25V
2608	5322 122 32531	100pF 5% 50V
2610Δ	4822 126 10002	100nF 20% 25V
2611Δ	4822 124 41579	10µF 20% 50V
2612Δ	4822 124 41579	10µF 20% 50V
2613Δ	4822 126 10002	100nF 20% 25V
2640	4822 122 33575	220pF 5% 50V
2641	5322 122 31863	330pF 5% 50V

3003Δ	4822 051 20101	100Ω 5% 0,1W
3007	4822 051 20223	22k 5% 0,1W
3008	4822 116 52257	22k 5% 0,5W
3009	4822 116 52257	22k 5% 0,5W
3013	4822 117 10834	47k 1% 0,1W
3014Δ	4822 051 20472	4k7 5% 0,1W
3019Δ	4822 051 20101	100Ω 5% 0,1W
3341	4822 116 52283	4k7 5% 0,5W
3342	4822 051 10102	1k 2% 0,25W
3349	4822 116 83884	47k 5% 0,5W
3350Δ	4822 051 20101	100Ω 5% 0,1W
3352	4822 051 10102	1k 2% 0,25W
3353	4822 116 83868	150Ω 5% 0,5W
3354	4822 051 20243	24k 5% 0,1W
3357	4822 117 11139	1k5 1% 0,1W
3358	4822 116 83872	220Ω 5% 0,5W
3359	4822 116 83868	150Ω 5% 0,5W
3364	4822 116 52175	100Ω 5% 0,5W
3366	4822 116 52175	100Ω 5% 0,5W
3376	4822 051 20683	68k 5% 0,1W
3377	4822 117 12234	20M . 5% 250MW.
3378	4822 117 12234	20M . 5% 250MW.
3382	4822 116 83868	150Ω 5% 0,5W
3383	4822 116 83868	150Ω 5% 0,5W
3391Δ	4822 051 20101	100Ω 5% 0,1W
3392Δ	4822 051 20471	470Ω 5% 0,1W
3393	4822 051 20479	47Ω 5% 0,1W
3395Δ	4822 051 20101	100Ω 5% 0,1W
3396	4822 051 10102	1k 2% 0,25W
3397Δ	4822 051 20332	3k3 5% 0,1W
3398	4822 116 83872	220Ω 5% 0,5W
3400	4822 051 20561	560Ω 5% 0,1W
3401	4822 051 10102	1k 2% 0,25W
3402	4822 051 20681	680Ω 5% 0,1W
3403Δ	4822 051 20101	100Ω 5% 0,1W
3404	4822 116 52175	100Ω 5% 0,5W
3405	4822 117 11139	1k5 1% 0,1W
3406	4822 117 11139	1k5 1% 0,1W
3407Δ	4822 051 20472	4k7 5% 0,1W
3408	4822 117 11139	1k5 1% 0,1W
3409	4822 117 11139	1k5 1% 0,1W
3410	4822 117 11139	1k5 1% 0,1W
3411	4822 116 52283	4k7 5% 0,5W
3412	4822 116 52207	1k2 5% 0,5W
3413	4822 051 20561	560Ω 5% 0,1W
3414Δ	4822 051 20471	470Ω 5% 0,1W
3415	4822 117 10833	10k 1% 0,1W
3418	4822 116 83864	10k 5% 0,5W
3419	4822 050 11002	1k 1% 0,4W
3420	4822 050 11002	1k 1% 0,4W
3421	4822 116 52201	75Ω 5% 0,5W
3422	4822 051 20224	220k 5% 0,1W
3423	4822 051 20224	220k 5% 0,1W
3424	4822 116 83864	10k 5% 0,5W
3425	4822 116 83868	150Ω 5% 0,5W
3426	4822 116 83868	150Ω 5% 0,5W
3427	4822 050 11002	1k 1% 0,4W
3428	4822 116 52201	75Ω 5% 0,5W
3429	4822 050 11002	1k 1% 0,4W
3430	4822 116 52201	75Ω 5% 0,5W
3431	4822 116 52201	75Ω 5% 0,5W
3432	4822 116 52175	100Ω 5% 0,5W
3433	4822 051 20224	220k 5% 0,1W
3434	4822 051 20224	220k 5% 0,1W
3435	4822 116 52201	75Ω 5% 0,5W
3436	4822 116 83864	10k 5% 0,5W
3437	4822 116 83868	150Ω 5% 0,5W
3438	4822 116 83868	150Ω 5% 0,5W
3439	4822 050 11002	1k 1% 0,4W
3440Δ	4822 051 20471	470Ω 5% 0,1W
3441	4822 116 52201	75Ω 5% 0,5W
3442	4822 116 52175	100Ω 5% 0,5W
3443	4822 050 11002	1k 1% 0,4W
3444	4822 116 52201	75Ω 5% 0,5W
3445	4822 116 52201	75Ω 5% 0,5W
3446	4822 116 52201	75Ω 5% 0,5W
3447	4822 116 52201	75Ω 5% 0,5W
3448	4822 117 10833	10k 1% 0,1W
3449	4822 051 20104	100k 5% 0,1W
3450	4822 051 20104	100k 5% 0,1W
3451	4822 051 20104	100k 5% 0,1W
3452	4822 051 20104	100k 5% 0,1W
3453	4822 116 83868	150Ω 5% 0,5W
3454	4822 116 83868	150Ω 5% 0,5W
3455	4822 051 20104	100k 5% 0,1W
3456	4822 051 20104	100k 5% 0,1W
3457	4822 117 10833	10k 1% 0,1W
3458	4822 117 10833	10k 1% 0,1W
3459	4822 051 20561	560Ω 5% 0,1W
3460	4822 117 11503	220Ω 1% 0.1W
3461Δ	4822 052 10478	4Ω7 5% 0,33W
3462	4822 051 20104	100k 5% 0,1W
3463	4822 116 52175	100Ω 5% 0,5W
3464	4822 117 11507	6k8 1% 0,1W
3465	4822 116 52175	100Ω 5% 0,5W
3466	4822 117 10833	10k 1% 0,1W
3467	4822 051 20104	100k 5% 0,1W
3468Δ	4822 052 10478	4Ω7 5% 0,33W
3469	4822 116 52175	100Ω 5% 0,5W
3470	4822 117 11507	6k8 1% 0,1W
3471	4822 117 11507	6k8 1% 0,1W
3472	4822 116 52175	100Ω 5% 0,5W
3473	4822 051 20104	100k 5% 0,1W
3474	4822 051 20104	100k 5% 0,1W
3475Δ	4822 052 10478	4Ω7 5% 0,33W
3476	4822 116 52175	100Ω 5% 0,5W
3477	4822 116 52257	22k 5% 0,5W
3478Δ	4822 052 10478	4Ω7 5% 0,33W
3479	4822 051 20681	680Ω 5% 0,1W
3480Δ	4822 051 20101	100Ω 5% 0,1W
3481	4822 117 10353	150Ω 1% 0,1W
3482	4822 051 20561	560Ω 5% 0,1W
3483	4822 116 83868	150Ω 5% 0,5W
3484	4822 116 52175	100Ω 5% 0,5W
3485	4822 116 52201	75Ω 5% 0,5W
3486	4822 116 52175	100Ω 5% 0,5W
3487	4822 116 52201	75Ω 5% 0,5W
3488	4822 051 10102	1k 2% 0,25W
3489	4822 051 10102	1k 2% 0,25W
3490Δ	4822 051 20101	100Ω 5% 0,1W
3491	4822 051 10151	150Ω 2% 0,25W
3492	4822 051 20331	330Ω 5% 0,1W
3493	4822 051 20331	330Ω 5% 0,1W
3496Δ	4822 051 20332	3k3 5% 0,1W
3497	4822 051 10369	36Ω 2% 0,25W
3498	4822 117 11504	270Ω 1% 0.1W
3499	4822 116 52249	1k8 5% 0,5W
3500Δ	4822 052 10478	4Ω7 5% 0,33W
3503	4822 100 12221	2k2 20% 0,1W
3506Δ	4822 052 10478	4Ω7 5% 0,33W
3507Δ	4822 052 10478	4Ω7 5% 0,33W
3508	4822 116 52219	330Ω 5% 0,5W
3509Δ	4822 052 10478	4Ω7 5% 0,33W
3510	4822 116 52219	330Ω 5% 0,5W
3511	4822 051 20223	22k 5% 0,1W
3512	4822 051 20223	22k 5% 0,1W
3513Δ	4822 051 20471	470Ω 5% 0,1W
3514Δ	4822 051 20471	470Ω 5% 0,1W
3515	4822 051 20681	680Ω 5% 0,1W
3516	4822 051 20182	1k8 5% 0,1W
3517Δ	4822 051 20101	100Ω 5% 0,1W
3518	4822 050 11002	1k 1% 0,4W
3519	4822 117 11503	220Ω 1% 0.1W
3520	4822 117 11503	220Ω 1% 0.1W
3521	4822 051 20333	33k 5% 0,1W
3522	4822 051 20184	180k 5% 0,1W
3523	4822 051 20223	22k 5% 0,1W
3524	4822 117 10834	47k 1% 0,1W
3525	4822 051 20223	22k 5% 0,1W
3526Δ	4822 051 20471	470Ω 5% 0,1W
3527Δ	4822 051 20471	470Ω 5% 0,1W
3528	4822 051 20681	680Ω 5% 0,1W
3529	4822 051 20182	1k8 5% 0,1W
3530Δ	4822 051 20101	100Ω 5% 0,1W
3531	4822 117 10965	18k 1% 0,1W
3532	4822 051 20154	150k 5% 0,1W
3533	4822 117 10834	47k 1% 0,1W
3534	4822 051 20124	120k 5% 0,1W
3535Δ	4822 052 10478	4Ω7 5% 0,33W
3536Δ	4822 051 20121	120Ω 5% 0,1W
3537	4822 117 11596	390Ω 1% 0,1W
3538	4822 117 11596	390Ω 1% 0,1W
3540	4822 116 52202	82Ω 5% 0,5W
3541	4822 051 20829	82Ω 5% 0,1W
3542	4822 116 52202	82Ω 5% 0,5W
3543	4822 051 20829	82Ω 5% 0,1W
3544	4822 116 52202	82Ω 5% 0,5W
3546Δ	4822 051 20471	470Ω 5% 0,1W
3547	4822 117 11449	2k2 1% 0,1W
3548Δ	4822 051 20229	22Ω 5% 0,1W
3549	4822 051 20829	82Ω 5% 0,1W
3550	4822 051 20822	8k2 5% 0,1W
3551Δ	4822 051 20101	100Ω 5% 0,1W
3552	4822 117 11449	2k2 1% 0,1W
3554Δ	4822 051 20472	4k7 5% 0,1W
3555	4822 117 10833	10k 1% 0,1W
3556	4822 051 20331	330Ω 5% 0,1W
3557	4822 051 10102	1k 2% 0,25W
3558	4822 117 10833	10k 1% 0,1W
3559Δ	4822 051 20101	100Ω 5% 0,1W
3560	4822 116 52175	100Ω 5% 0,5W
3564Δ	4822 051 20101	100Ω 5% 0,1W
3565	4822 051 20331	330Ω 5% 0,1W
3600	4822 116 83883	470Ω 5% 0,5W
3601	4822 117 10833	10k 1% 0,1W
3602	4822 116 52283	4k7 5% 0,5W
3603	4822 116 83864	10k 5% 0,5W
3604Δ	4822 051 20101	100Ω 5% 0,1W
3605Δ	4822 051 20101	100Ω 5% 0,1W
3606	4822 117 11449	2k2 1% 0,1W
3607	4822 117 11449	2k2 1% 0,1W
3608Δ	4822 051 20472	4k7 5% 0,1W
3609	4822 116 83864	10k 5% 0,5W
3610	4822 117 10833	10k 1% 0,1W
3611	4822 116 52283	4k7 5% 0,5W
3612	4822 116 52283	4k7 5% 0,5W
3613	4822 116 83883	470Ω 5% 0,5W
3614	4822 116 52283	4k7 5% 0,5W
3615	4822 117 10833	10k 1% 0,1W
3616	4822 117 10833	10k 1% 0,1W
3617	4822 051 10102	1k 2% 0,25W
3618Δ	4822 051 20472	4k7 5% 0,1W
3619Δ	4822 051 20472	4k7 5% 0,1W
3620Δ	4822 051 20472	4k7 5% 0,1W
3621Δ	4822 051 20472	4k7 5% 0,1W
3623Δ	4822 051 20472	4k7 5% 0,1W
3624Δ	4822 051 20472	4k7 5% 0,1W
3625Δ	4822 051 20472	4k7 5% 0,1W
3626Δ	4822 051 20472	4k7 5% 0,1W
3627Δ	4822 051 20472	4k7 5% 0,1W
3628	4822 051 10102	1k 2% 0,25W
3630	4822 116 83864	10k 5% 0,5W
3631	4822 117 11507	6k8 1% 0,1W
3632	4822 117 11503	220Ω 1% 0.1W
3633Δ	4822 051 20472	4k7 5% 0,1W
3634	4822 117 11504	270Ω 1% 0.1W
3635	4822 116 52283	4k7 5% 0,5W
3636	4822 117 10833	10k 1% 0,1W
3637	4822 116 83864	10k 5% 0,5W
3640	4822 117 10834	47k 1% 0,1W
3641	4822 051 20273	27k 5% 0,1W
3642	4822 117 10833	10k 1% 0,1W
3643	4822 051 20104	100k 5% 0,1W
3644	4822 117 11503	220Ω 1% 0.1W
3650	4822 051 20822	8k2 5% 0,1W
3651	4822 117 10833	10k 1% 0,1W
3652	4822 051 20822	8k2 5% 0,1W
3653	4822 051 20122	1k2 5% 0,1W
3660Δ	4822 051 20008	0Ω jumper . (0805)
4xxx	4822 051 10008	0Ω 5% 0,25W (1206)
4xxx	4822 051 20008	0Ω 5% 0,25W (0805)

5000Δ	4822 157 51462	10µH 10%
5246	4822 157 11706	10µH 5% 2,4X3,4
5378	4822 157 60123	6,8µH 10%
5380	4822 157 60123	6,8µH 10%
5381	4822 157 60123	6,8µH 10%
5382	4822 157 53001	27µH 10% 2,4X3,4
5383	4822 156 21719	1,5µH 10%
5500	4822 157 51312	68µH 10%
5501	4822 153 20251	18µH 10%
5600	4822 157 60123	6,8µH 10%
5601	4822 152 20677	10µH 10%

6003	4822 130 80542	BZX84-C33
6302Δ	4822 130 31983	BAT85
6303Δ	4822 130 31983	BAT85
6400	4822 130 82346	BZV55-C27
6401	4822 130 82346	BZV55-C27
6402	4822 130 82346	BZV55-C27
6403	4822 130 82346	BZV55-C27
6404	4822 130 81513	BZV55-C6V8
6405	4822 130 81513	BZV55-C6V8
6406	4822 130 81513	BZV55-C6V8
6407	4822 130 81513	BZV55-C6V8
6408	4822 130 81513	BZV55-C6V8
6409	4822 130 81513	BZV55-C6V8
6410	4822 130 81513	BZV55-C6V8
6411	4822 130 81513	BZV55-C6V8
6412	4822 130 81513	BZV55-C6V8
6413	4822 130 81513	BZV55-C6V8
6414Δ	4822 130 31983	BAT85
6415	4822 130 82346	BZV55-C27
6416	4822 130 82346	BZV55-C27
6417	4822 130 82346	BZV55-C27
6418	4822 130 82346	BZV55-C27
6419	4822 130 81513	BZV55-C6V8
6420	4822 130 81513	BZV55-C6V8
6421	4822 130 81513	BZV55-C6V8
6422	4822 130 81513	BZV55-C6V8
6423	4822 130 82346	BZV55-C27
6424	4822 130 82346	BZV55-C27
6425	4822 130 82346	BZV55-C27
6426	4822 130 82346	BZV55-C27
6427	4822 130 82346	BZV55-C27
6428	4822 130 82346	BZV55-C27
6429	4822 130 82346	BZV55-C27
6430	4822 130 82346	BZV55-C27
6431	4822 130 81513	BZV55-C6V8
6432	4822 130 81513	BZV55-C6V8
6433	4822 130 81513	BZV55-C6V8
6434	4822 130 82346	BZV55-C27
6435	4822 130 82346	BZV55-C27
6436	4822 130 82346	BZV55-C27
6437	4822 130 82346	BZV55-C27
6438	4822 130 82346	BZV55-C27
6520	4822 130 80446	BAS32L
6521	4822 130 80446	BAS32L
6522	4822 130 80446	BAS32L
6523Δ	5322 130 31928	BAS16
6526Δ	5322 130 31928	BAS16
6540	4822 130 81513	BZV55-C6V8
6546	5322 130 33671	BZX84-C6V2
6640	4822 130 82334	BAS85
6641	4822 130 81513	BZV55-C6V8
6642	4822 130 81513	BZV55-C6V8
6643	4822 130 81513	BZV55-C6V8

7352	4822 209 12942	TDA9143/N1
7352	4822 209 90952	TDA9144/N1
7358	4822 209 16804	TDA4665/V5
7390	4822 130 60511	BC847B
7395	4822 130 60511	BC847B
7396	5322 130 42136	BC848C
7397	5322 130 60508	BC857B
7400	4822 130 60511	BC847B
7401	4822 130 40959	BC547B
7402	4822 130 40959	BC547B
7403	4822 130 60511	BC847B
7404	4822 130 60511	BC847B
7405	4822 130 44568	BC557B
7406	4822 209 12999	TEA6415C
7407	4822 209 10263	HEF4052BP
7408	5322 130 60508	BC857B
7409	4822 130 60511	BC847B
7411Δ	4822 209 90051	TDA8601/C1
7412	5322 130 60508	BC857B
7413	4822 130 60511	BC847B
7415	5322 130 60508	BC857B
7416	5322 130 60508	BC857B
7500	4822 209 90035	TDA4780/V3
7501	4822 130 42131	BF550
7502	5322 130 42136	BC848C

7503	4822 130 42131	BF550
7504	5322 130 42136	BC848C
7505	4822 130 60511	BC847B
7506	5322 130 42136	BC848C
7518Δ	4822 209 73852	PMBT2369
7536	5322 130 60508	BC857B
7538	5322 130 60508	BC857B
7539	4822 130 60511	BC847B
7540	5322 130 60508	BC857B
7580	4822 209 15116	TDA9177/N1
7600	4822 209 13001	TMP47C840N-U641
7601	4822 130 60511	BC847B
7602	4822 130 60511	BC847B
7603	4822 130 60511	BC847B
7640	4822 130 60511	BC847B

IF panel [L]

Various

	4822 265 10433	Pin strip
1100	4822 242 10307	Filter OFWG3956M
1100	4822 242 81436	Filter OFWK3953M
1101	4822 242 10306	Filter OFWK9463M
1102	4822 242 10308	Filter OWFL9354M
1110	4822 212 10575	IF panel Multi-Europe
1110	4822 212 10576	IF panel Multi-France
1110	4822 212 10577	IF panel Multi-Russian
1160	4822 153 30025	Filter 6,0MHz
1160	4822 242 72211	Filter 5,5MHz
1161	4822 242 72211	Filter 5,5MHz
1161	4822 242 81978	Filter 4,5MHz

2100Δ	4822 126 10002	100nF 20% 25V
2101Δ	4822 122 33177	10nF 20% 50V
2102Δ	4822 051 20008	0R00 JUMP. ()
2102	4822 126 13694	68pF 1% 63V
2103	5322 122 31863	330pF 5% 50V
2104	5322 122 31873	2,7pF +-0,5 100V
2105	5322 122 31873	2,7pF +-0,5 100V
2109Δ	4822 122 33177	10nF 20% 50V
2111Δ	4822 122 33177	10nF 20% 50V
2112	5322 122 32447	1pF 5% 50V
2115Δ	4822 051 20008	0R00 JUMP. ()
2115	4822 122 33575	220pF 5% 50V
2116	4822 126 13694	68pF 1% 63V
2117	5322 122 31873	2,7pF +-0,5 100V
2120Δ	4822 126 10002	100nF 20% 25V
2121Δ	4822 126 10002	100nF 20% 25V
2122Δ	4822 126 10002	100nF 20% 25V
2123Δ	4822 122 33177	10nF 20% 50V
2140Δ	4822 122 33177	10nF 20% 50V
2141Δ	4822 126 10002	100nF 20% 25V
2142Δ	4822 126 10002	100nF 20% 25V
2144	4822 124 40242	1µF 20% 63V
2144	4822 124 41576	2,2µF 20% 50V
2145Δ	4822 122 33177	10nF 20% 50V
2150	4822 124 41643	100µF 20% 16V
2165Δ	4822 126 10002	100nF 20% 25V
2166	5322 122 33063	2,2pF 5% 50V
2167	4822 124 41576	2,2µF 20% 50V
2168	4822 124 41576	2,2µF 20% 50V
2170Δ	4822 124 41579	10µF 20% 50V
2171Δ	4822 126 10002	100nF 20% 25V

3100	4822 117 11449	2k2 1% 0,1W
3104Δ	4822 051 20101	100Ω 5% 0,1W
3104	4822 051 20479	47Ω 5% 0,1W
3106Δ	4822 051 20472	4k7 5% 0,1W
3107	4822 117 10833	10k 1% 0,1W
3109	4822 051 10102	1k 2% 0,25W
3121	4822 117 11507	6k8 1% 0,1W
3122	4822 117 10833	10k 1% 0,1W
3124	4822 051 20822	8k2 5% 0,1W
3125	4822 116 83864	10k 5% 0,5W
3126	4822 116 52256	2k2 5% 0,5W
3127	4822 116 52256	2k2 5% 0,5W
3127	4822 116 52283	4k7 5% 0,5W
3128	4822 116 52256	2k2 5% 0,5W
3128	4822 116 52283	4k7 5% 0,5W
3129	4822 116 52257	22k 5% 0,5W
3130	4822 116 52257	22k 5% 0,5W
3131	4822 051 20223	22k 5% 0,1W
3140	4822 101 11192	22k 30%LIN 0.1W
3141Δ	4822 051 20471	470Ω 5% 0,1W
3141	4822 117 11448	180Ω 1% 0,1W
3146	4822 116 52283	4k7 5% 0,5W
3150	4822 116 52213	180Ω 5% 0,5W
3151	4822 116 52226	560Ω 5% 0,5W
3160	4822 117 11448	180Ω 1% 0,1W
3160	4822 117 11503	220Ω 1% 0.1W
3161Δ	4822 051 20008	0Ω jumper . (0805)
3162	4822 117 10833	10k 1% 0,1W
3165	4822 117 10834	47k 1% 0,1W
3166	4822 117 10834	47k 1% 0,1W
3191	4822 051 10102	1k 2% 0,25W
3192	4822 116 52226	560Ω 5% 0,5W
3199	4822 051 20331	330Ω 5% 0,1W
3199Δ	4822 051 20471	470Ω 5% 0,1W
3199	4822 117 11503	220Ω 1% 0.1W
4xxx	4822 051 10008	0Ω 5% 0,25W (1206)
4xxx	4822 051 20008	0Ω 5% 0,25W (0805)

5100	4822 157 10401	0µH 33 20%
5101	4822 157 10403	Coil trimm.
5102	4822 157 10404	Coil trimm.
5104	4822 157 53302	1µH 20%
5140	4822 157 53302	1µH 20%
5141	4822 157 53302	1µH 20%
5160	4822 152 20677	10µH 10%
5161	4822 157 53303	12µH 10%
5161	4822 157 60123	6,8µH 10%
5165	4822 157 10402	Coil trimm.

6100	4822 130 10414	BA792
6101	4822 130 10414	BA792
6110	4822 130 10414	BA792
6111	4822 130 10414	BA792
6112	4822 130 10414	BA792

7100	4822 209 13003	TDA9811/V3
7110	4822 130 10198	MMUN2214
7120	4822 130 10198	MMUN2214
7121	4822 130 10198	MMUN2214
7122	4822 130 10198	MMUN2214
7123	4822 130 10198	MMUN2214
7124	5322 130 41983	BC858B
7160	4822 130 10198	MMUN2214
7161	5322 130 41983	BC858B
7190	4822 130 10198	MMUN2214
7191	4822 130 10198	MMUN2214

Feature-box 3 [M1]

Various

	4822 532 21513	Spacer 9,5mm
	4822 255 41356	PLCC socket
	4822 267 51433	10P female
1345	4822 212 11198	FBX3 S/L
1345	4822 212 11425	FBX3 S/L/P
1485	4822 242 82198	Crystal 12,0 MHz

2375	5322 122 32531	100pF 5% 50V
2376Δ	4822 122 33496	100nF 10% 63V
2377	4822 126 13689	18pF 1% 63V
2378	4822 126 13693	56pF 1% 63V
2379	4822 126 13695	82pF 1% 63V
2380	4822 122 32542	47nF 10% 63V
2381	5322 122 32268	470pF 10% 50V
2385	5322 122 32531	100pF 5% 50V
2386Δ	4822 126 10002	100nF 20% 25V
2387	4822 126 13693	56pF 1% 63V
2388	5322 126 10343	1,8pF 5% 63V
2389	4822 126 10326	180pF 5% 63V
2390Δ	5322 122 32654	22nF 10% 63V
2395	5322 122 32531	100pF 5% 50V
2396Δ	4822 126 10002	100nF 20% 25V
2397	4822 126 13693	56pF 1% 63V
2398	5322 126 10343	1,8pF 5% 63V
2399	4822 126 10326	180pF 5% 63V
2400Δ	5322 122 32654	22nF 10% 63V
2410	4822 124 11912	220µF 20% 6,3V
2411	4822 124 11912	220µF 20% 6,3V
2412Δ	5322 122 32654	22nF 10% 63V
2413Δ	5322 122 32654	22nF 10% 63V
2415Δ	5322 122 32654	22nF 10% 63V
2419	4822 124 11911	47µF 20% 16V
2420Δ	4822 126 10002	100nF 20% 25V
2421Δ	5322 122 32654	22nF 10% 63V
2422	4822 124 41643	100µF 20% 16V
2423	4822 124 41643	100µF 20% 16V
2424Δ	5322 122 32654	22nF 10% 63V
2425Δ	5322 122 32654	22nF 10% 63V
2426	4822 124 11912	220µF 20% 6,3V
2430	5322 122 32531	100pF 5% 50V
2433	5322 122 32531	100pF 5% 50V
2435	5322 122 32531	100pF 5% 50V
2440Δ	4822 126 10002	100nF 20% 25V
2441	4822 124 22027	47µF 20% 25V
2445Δ	4822 126 10002	100nF 20% 25V
2446Δ	4822 126 10002	100nF 20% 25V
2447	4822 126 11692	1µF
2448	4822 124 11911	47µF 20% 16V
2448	4822 124 22027	47µF 20% 25V
2449Δ	4822 124 40433	47µF 20% 25V
2450Δ	5322 122 32654	22nF 10% 63V
2451Δ	5322 122 32654	22nF 10% 63V
2452Δ	4822 124 40246	4,7µF 20% 63V DXH=5X11
2453Δ	4822 126 10002	100nF 20% 25V
2455	5322 124 21731	10µF 20% 50V
2460Δ	5322 122 32654	22nF 10% 63V
2462Δ	5322 122 32654	22nF 10% 63V
2465	5322 122 32966	39pF 5% 50V
2466	5322 122 32531	100pF 5% 50V
2467	4822 122 32504	15pF 2% 50V 1206
2468	5322 122 32658	22pF 5% 50V
2469	5322 122 33538	150pF 2% 63V
2476	5322 122 32659	33pF 5% 50V
2477	5322 122 32287	4,7pF 5% 50V
2478	5322 122 33861	120pF 10% 50V
2481	5322 122 32659	33pF 5% 50V
2482	5322 122 32287	4,7pF 5% 50V
2483	5322 122 33861	120pF 10% 50V
2485	5322 122 32448	10pF 5% 50V
2486	5322 122 32448	10pF 5% 50V
2490	5322 122 32531	100pF 5% 50V
2492	5322 122 33538	150pF 2% 63V
2493	5322 122 32531	100pF 5% 50V
2505Δ	4822 126 10002	100nF 20% 25V
2508	4822 126 13692	47pF 1% 63V
2509	4822 126 13692	47pF 1% 63V
2545	4822 124 11911	47µF 20% 16V

3370Δ	4822 051 20101	100Ω 5% 0,1W
3371Δ	4822 051 20101	100Ω 5% 0,1W
3372Δ	4822 051 20101	100Ω 5% 0,1W
3375Δ	4822 051 20332	3k3 5% 0,1W
3376	4822 117 10834	47k 1% 0,1W
3377	4822 051 10102	1k 2% 0,25W
3379	4822 117 11449	2k2 1% 0,1W
3380	4822 051 20681	680Ω 5% 0,1W
3381	4822 051 20751	750Ω 5% 0,1W
3385Δ	4822 051 20332	3k3 5% 0,1W
3386	4822 117 10834	47k 1% 0,1W
3387	4822 117 11503	220Ω 1% 0.1W
3389	4822 117 10361	680Ω 1% 0,1W
3390	4822 051 20681	680Ω 5% 0,1W
3395Δ	4822 051 20332	3k3 5% 0,1W
3396	4822 117 10834	47k 1% 0,1W
3398	4822 117 10845	620Ω 1% 0.1W
3399	4822 117 10361	680Ω 1% 0,1W
3400	4822 051 20681	680Ω 5% 0,1W
3410	4822 116 52176	10Ω 5% 0,5W
3411	4822 117 11448	180Ω 1% 0,1W
3413	4822 117 11504	270Ω 1% 0.1W
3414	4822 051 20562	5k6 5% 0,1W 0805
3422Δ	4822 052 10109	10Ω 5% 0,33W
3430	4822 051 10102	1k 2% 0,25W
3431Δ	4822 051 20472	4k7 5% 0,1W
3432Δ	4822 051 20472	4k7 5% 0,1W
3433Δ	4822 051 20332	3k3 5% 0,1W
3434Δ	4822 051 20101	100Ω 5% 0,1W
3435Δ	4822 051 20332	3k3 5% 0,1W
3436Δ	4822 051 20101	100Ω 5% 0,1W
3450Δ	4822 051 20101	100Ω 5% 0,1W
3451Δ	4822 051 20101	100Ω 5% 0,1W
3452Δ	4822 051 20101	100Ω 5% 0,1W
3453Δ	4822 051 20101	100Ω 5% 0,1W
3460Δ	4822 052 10109	10Ω 5% 0,33W
3461	4822 117 11507	6k8 1% 0,1W
3462	4822 051 20331	330Ω 5% 0,1W
3465	4822 117 11596	390Ω 1% 0,1W
3466	4822 117 11373	100Ω 1% 0805
3467	4822 051 20479	47Ω 5% 0,1W
3468	4822 051 20479	47Ω 5% 0,1W
3475	4822 117 11596	390Ω 1% 0,1W
3476	4822 117 11503	220Ω 1% 0.1W
3477	4822 117 11188	20k 1% 0,1W
3480	4822 117 11596	390Ω 1% 0,1W
3481	4822 117 11504	270Ω 1% 0.1W
3482	5322 117 12487	1k 1% 0,125W
3485	4822 051 20104	100k 5% 0,1W
3490Δ	4822 051 20472	4k7 5% 0,1W
3491	4822 117 10833	10k 1% 0,1W
3492Δ	4822 051 20472	4k7 5% 0,1W
3493	4822 117 10833	10k 1% 0,1W
3494Δ	4822 051 20471	470Ω 5% 0,1W
3495	4822 051 20479	47Ω 5% 0,1W
3500	4822 051 20331	330Ω 5% 0,1W
3502Δ	4822 051 20472	4k7 5% 0,1W
3503	4822 117 11503	220Ω 1% 0.1W
3504	4822 051 20273	27k 5% 0,1W
3505	4822 117 11449	2k2 1% 0,1W
3506	4822 117 10833	10k 1% 0,1W
3508Δ	4822 051 20101	100Ω 5% 0,1W
3509Δ	4822 051 20101	100Ω 5% 0,1W
3510	4822 051 10102	1k 2% 0,25W
3511	4822 051 10102	1k 2% 0,25W
3512Δ	4822 051 20101	100Ω 5% 0,1W
3513Δ	4822 051 20101	100Ω 5% 0,1W
3514Δ	4822 051 20101	100Ω 5% 0,1W
3515Δ	4822 051 20008	0Ω jumper . (0805)
3999	4822 051 20392	3k9 5% 0,1W
4xxx	4822 051 10008	0Ω 5% 0,25W (1206)
4xxx	4822 051 20008	0Ω 5% 0,25W (0805)

5377	4822 157 53303	12µH 10%
5378	4822 153 20251	18µH 10%
5381	4822 157 52333	100µH 10%
5388	4822 157 63316	56µH 10%
5398	4822 157 63316	56µH 10%
5420	4822 157 51216	5,6µH 10%
5421	4822 157 51216	5,6µH 10%
5425	4822 157 60147	2,2µH
5440	4822 157 51216	5,6µH 10%
5445	4822 157 51216	5,6µH 10%
5446	4822 157 51216	5,6µH 10%
5447	4822 157 51216	5,6µH 10%
5453	4822 157 51216	5,6µH 10%
5454	4822 157 51216	5,6µH 10%
5465	4822 156 21719	1,5µH 20%
5466	4822 157 71443	1,8µH 20%
5477	4822 157 60122	4,7µH 10%
5482	4822 157 60122	4,7µH 10%
5490	4822 157 60147	2,2µH
5492	4822 157 60147	2,2µH
5505	4822 157 51216	5,6µH 10%

6500	4822 130 34167	BZX79-B6V2

7376	5322 130 42136	BC848C
7380	5322 130 42136	BC848C
7386	5322 130 42136	BC848C
7390	5322 130 42136	BC848C
7396	5322 130 42136	BC848C
7400	5322 130 42136	BC848C
7432Δ	4822 209 73852	PMBT2369
7440	4822 209 90528	TDA8753AN/C1
7445	4822 209 15117	MSM5412222-30JS
7446	4822 209 15117	MSM5412222-30JS
7447	4822 209 90034	SAA4990H/V0
7450	4822 209 33689	SAA4970T/V2
7460	4822 209 72042	L78L05ACZ
7461	5322 130 42136	BC848C
7490Δ	4822 209 73852	PMBT2369
7492Δ	4822 209 73852	PMBT2369
7493	4822 130 42513	BC858C
7500	5322 130 42136	BC848C
7504Δ	4822 209 73852	PMBT2369
7505	4822 900 10982	3104 317 00450
7506	4822 130 42513	BC858C

Feature-box 4 [M2]

Various

	4822 532 21513	Spacer 9,5mm
	4822 267 51433	10P female
1345	4822 212 11204	FBX4 S/L/P
1345	4822 212 11207	FBX4 S/L/P PALplus
1345	4822 212 11324	FBX4 S/L/P PALplus VGA
1345	4822 212 11657	FBX4 S/L
1485	4822 242 72572	Crystal 12,0 MHz
1485	4822 242 82198	Crystal 12MHz

2373	4822 126 11692	1µF 20% 5V
2374	4822 126 11692	1µF 20% 5V
2375	5322 122 32531	100pF 5% 50V
2376	5322 122 32268	470pF 10% 50V
2377	4822 126 13689	18pF 1% 63V
2378	4822 126 13693	56pF 1% 63V
2379	5322 122 32531	100pF 5% 50V
2380	4822 126 11692	1µF 20% 5V
2381	4822 126 11692	1µF 20% 5V
2385	5322 122 32531	100pF 5% 50V
2386Δ	4822 126 10002	100nF 20% 25V
2387	4822 126 13693	56pF 1% 63V
2388	5322 126 10343	1,8pF 5% 63V
2389	4822 126 10326	180pF 5% 63V
2390Δ	5322 122 32654	22nF 10% 63V
2395	5322 122 32531	100pF 5% 50V
2396Δ	4822 126 10002	100nF 20% 25V
2397	4822 126 13693	56pF 1% 63V
2398	5322 126 10343	1,8pF 5% 63V
2399	4822 126 10326	180pF 5% 63V
2400Δ	5322 122 32654	22nF 10% 63V
2410	4822 124 11912	220µF 20% 6,3V
2411	4822 124 11912	220µF 20% 6,3V
2412Δ	5322 122 32654	22nF 10% 63V

2413Δ	5322 122 32654	22nF 10% 63V
2415Δ	5322 122 32654	22nF 10% 63V
2419	5322 121 10472	47µF /25
2420Δ	4822 126 10002	100nF 20% 25V
2421Δ	5322 122 32654	22nF 10% 63V
2422	4822 124 41643	100µF 20% 16V
2423	4822 124 80499	100µF 20% 16V
2424Δ	5322 122 32654	22nF 10% 63V
2425Δ	5322 122 32654	22nF 10% 63V
2426	4822 124 11912	220µF 20% 6,3V
2430	5322 122 32531	100pF 5% 50V
2433	5322 122 32531	100pF 5% 50V
2435	5322 122 32531	100pF 5% 50V
2440Δ	4822 126 10002	100nF 20% 25V
2441	5322 121 10472	47µF /25
2442	4822 126 11692	1µF 20% 5V
2443	4822 126 11692	1µF 20% 5V
2444	4822 126 11692	1µF 20% 5V
2445	4822 126 11692	1µF 20% 5V
2446	4822 126 11692	1µF 20% 5V
2447	4822 126 11692	1µF 20% 5V
2448	4822 126 11692	1µF 20% 5V
2450Δ	5322 122 32654	22nF 10% 63V
2451Δ	5322 122 32654	22nF 10% 63V
2452	4822 124 11946	22µF 20% 16V
2453Δ	4822 126 10002	100nF 20% 25V
2454	4822 124 11911	47µF 20% 16V
2455	4822 124 11947	10µF 20% 16V
2460Δ	5322 122 32654	22nF 10% 63V
2462Δ	5322 122 32654	22nF 10% 63V
2465	5322 122 32966	39pF 5% 50V
2466	5322 122 32531	100pF 5% 50V
2467	4822 122 32504	15pF 2% 50V 1206
2468	5322 122 32966	39pF 5% 50V
2469	5322 122 33861	120pF 10% 50V
2476	5322 122 32659	33pF 5% 50V
2477	5322 122 32287	4,7pF 5% 50V
2478	5322 122 33861	120pF 10% 50V
2481	5322 122 32659	33pF 5% 50V
2482	5322 122 32287	4,7pF 5% 50V
2483	5322 122 33861	120pF 10% 50V
2485	5322 122 32448	10pF 5% 50V
2486	5322 122 32448	10pF 5% 50V
2490	5322 122 32531	100pF 5% 50V
2492	5322 122 33538	150pF 2% 63V
2493	5322 122 32531	100pF 5% 50V
2505Δ	4822 126 10002	100nF 20% 25V
2508	4822 126 13692	47pF 1% 63V
2509	4822 126 13692	47pF 1% 63V

3375	4822 117 10833	10k 1% 0,1W
3376	4822 051 20751	750Ω 5% 0,1W
3377	4822 051 10102	1k 2% 0,25W
3380	4822 051 20681	680Ω 5% 0,1W
3381	4822 117 11503	220Ω 1% 0.1W
3382Δ	4822 051 20101	100Ω 5% 0,1W
3383Δ	4822 051 20101	100Ω 5% 0,1W
3384Δ	4822 051 20101	100Ω 5% 0,1W
3385Δ	4822 051 20332	3k3 5% 0,1W
3386	4822 117 10834	47k 1% 0,1W
3387	4822 117 11503	220Ω 1% 0.1W
3389	4822 117 10361	680Ω 1% 0,1W
3390	4822 051 20681	680Ω 5% 0,1W
3391	4822 117 11503	220Ω 1% 0.1W
3392Δ	4822 051 20101	100Ω 5% 0,1W
3393Δ	4822 051 20101	100Ω 5% 0,1W
3395Δ	4822 051 20332	3k3 5% 0,1W
3396	4822 117 10834	47k 1% 0,1W
3398	4822 117 10845	620Ω 1% 0.1W
3399	4822 117 10361	680Ω 1% 0,1W
3400	4822 051 20681	680Ω 5% 0,1W
3401	4822 117 11503	220Ω 1% 0.1W
3402Δ	4822 051 20101	100Ω 5% 0,1W
3410	4822 116 52176	10Ω 5% 0,5W
3411	4822 117 11448	180Ω 1% 0,1W
3413	4822 117 11504	270Ω 1% 0.1W
3414	4822 051 20562	5k6 5% 0,1W 0805
3420	4822 051 20223	22k 5% 0,1W
3422Δ	4822 052 10109	10Ω 5% 0,33W
3430	4822 051 10102	1k 2% 0,25W
3431Δ	4822 051 20472	4k7 5% 0,1W
3432Δ	4822 051 20472	4k7 5% 0,1W
3433Δ	4822 051 20332	3k3 5% 0,1W
3434Δ	4822 051 20101	100Ω 5% 0,1W
3435Δ	4822 051 20332	3k3 5% 0,1W
3436Δ	4822 051 20101	100Ω 5% 0,1W
3440	4822 051 20223	22k 5% 0,1W
3441	4822 051 20223	22k 5% 0,1W
3442	4822 051 20223	22k 5% 0,1W
3443	4822 051 20223	22k 5% 0,1W
3444	4822 051 20223	22k 5% 0,1W
3445	4822 051 20223	22k 5% 0,1W
3446	4822 051 10008	0Ω 5% 0,25W
3447	4822 051 10008	0Ω 5% 0,25W
3448	4822 051 10151	150Ω 2% 0,25W
3449	4822 117 11503	220Ω 1% 0.1W
3450Δ	4822 051 20229	22Ω 5% 0,1W
3451Δ	4822 051 20229	22Ω 5% 0,1W
3452Δ	4822 051 20101	100Ω 5% 0,1W
3453Δ	4822 051 20101	100Ω 5% 0,1W
3460Δ	4822 052 10109	10Ω 5% 0,33W
3461	4822 117 11507	6k8 1% 0,1W
3462	4822 051 20331	330Ω 5% 0,1W
3465	4822 117 11596	390Ω 1% 0,1W
3467	4822 051 20479	47Ω 5% 0,1W
3468Δ	4822 051 20109	10Ω 5% 0,1W
3469	4822 117 11448	180Ω 1% 0,1W
3471	4822 117 12149	4Ω7 1% 100M W.
3475	4822 117 11596	390Ω 1% 0,1W
3476	4822 117 11503	220Ω 1% 0.1W
3477	4822 117 11188	20k 1% 0,1W
3480	4822 117 11596	390Ω 1% 0,1W
3481	4822 117 11504	270Ω 1% 0.1W
3482	5322 117 12487	1k 1% 0,125W
3485	4822 051 20104	100k 5% 0,1W
3490Δ	4822 051 20472	4k7 5% 0,1W
3491	4822 117 10833	10k 1% 0,1W
3491	4822 117 11139	1k5 1% 0,1W
3492Δ	4822 051 20472	4k7 5% 0,1W
3493	4822 117 10833	10k 1% 0,1W
3494Δ	4822 051 20471	470Ω 5% 0,1W
3495	4822 051 20479	47Ω 5% 0,1W
3499	4822 051 10102	1k 2% 0,25W
3499	4822 117 11139	1k5 1% 0,1W
3500	4822 051 20331	330Ω 5% 0,1W
3502Δ	4822 051 20472	4k7 5% 0,1W
3503	4822 117 11503	220Ω 1% 0.1W
3504	4822 051 20273	27k 5% 0,1W
3505	4822 117 11449	2k2 1% 0,1W
3506	4822 117 10833	10k 1% 0,1W
3508Δ	4822 051 20101	100Ω 5% 0,1W
3509Δ	4822 051 20101	100Ω 5% 0,1W
3510	4822 117 10833	10k 1% 0,1W
3511	4822 117 10833	10k 1% 0,1W
4xxx	4822 051 10008	0Ω 5% 0,25W (1206)
4xxx	4822 051 20008	0Ω 5% 0,25W (0805)

5377	4822 157 53303	12µH 10%
5378	4822 153 20251	18µH 10%
5379	4822 157 52333	100µH 10%
5388	4822 157 63316	56µH 10%
5398	4822 157 63316	56µH 10%
5420	4822 157 53634	5,6µH 10%
5421	4822 157 53634	5,6µH 10%
5425	4822 157 60147	2,2µH
5440	4822 157 53634	5,6µH 10%
5445	4822 157 53634	5,6µH 10%
5446	4822 157 53634	5,6µH 10%
5447	4822 157 60147	2,2µH
5453	4822 157 60147	2,2µH
5454	4822 157 53634	5,6µH 10%
5465	4822 156 21719	1µH 5 20%
5466	4822 157 62552	2,2µH 20%
5477	4822 157 60122	4µH 7 10%
5482	4822 157 60122	4µH 7 10%
5490	4822 157 60147	2,2µH
5492	4822 157 60147	2,2µH
5505	4822 157 53634	5,6µH 10%

6367Δ	4822 130 30621	1N4148
6500	4822 130 34167	BZX79-B6V2

7376	5322 130 42136	BC848C
7380	5322 130 42136	BC848C
7386	5322 130 42136	BC848C
7390	5322 130 42136	BC848C
7396	5322 130 42136	BC848C
7400	5322 130 42136	BC848C
7432Δ	4822 209 73852	PMBT2369
7440	4822 209 90528	TDA8753AN/C1
7445	4822 209 15117	MSM5412222-30JS
7446	4822 209 15117	MSM5412222-30JS
7447	4822 209 12876	SAA4991WP/V1
7450	4822 209 33689	SAA4970T/V2
7460	4822 209 90927	L78L05ACD
7461	5322 130 42136	BC848C
7490Δ	4822 209 73852	PMBT2369
7492Δ	4822 209 73852	PMBT2369
7493	4822 130 42513	BC858C
7500	5322 130 42136	BC848C
7504Δ	4822 209 73852	PMBT2369
750	4822 900 11165	3104 317 00160

7506	4822 130 42513	BC858C

A/I panel [N]

Various

	4822 265 61296	40P male h 2,54
	4822 265 61299	40P male h 2,54
1367	4822 212 11202	AI S/L
1367	4822 212 11203	AI S/L/P
1367	4822 212 11205	AI S/L/P/ PALplus

2006Δ	4822 126 10002	100nF 20% 25V
2008Δ	4822 126 10002	100nF 20% 25V
2009Δ	4822 126 10002	100nF 20% 25V
2010Δ	4822 126 10002	100nF 20% 25V

3004	4822 117 10833	10k 1% 0,1W
3005	4822 117 10833	10k 1% 0,1W
3999Δ	4822 051 20101	100Ω 5% 0,1W
3999	4822 051 20279	27Ω 5% 0,1W
3999	4822 051 20829	82Ω 5% 0,1W

7006	4822 209 15399	SAA4946H/V1
7008	4822 209 90666	SAA4975H
7009	4822 209 15339	3104 317 00320
7010	4822 209 90966	SAA4995WP/V1

PALplus panel [N2]

Various

	4822 265 61299	40P male h 2,54
1367	4822 212 11206	AI panel + PALplus S/L/P

2000Δ	4822 126 10002	100nF 20% 25V
2001Δ	4822 126 10002	100nF 20% 25V
2002Δ	4822 126 10002	100nF 20% 25V
2003Δ	4822 126 10002	100nF 20% 25V
2004Δ	4822 126 10002	100nF 20% 25V
2005Δ	4822 126 10002	100nF 20% 25V
2006Δ	4822 126 10002	100nF 20% 25V
2012Δ	4822 126 10002	100nF 20% 25V
2015Δ	4822 126 10002	100nF 20% 25V
2016Δ	4822 126 10002	100nF 20% 25V

3001	4822 051 20122	1k2 5% 0,1W
3002Δ	4822 051 20101	100Ω 5% 0,1W
3003Δ	4822 051 20101	100Ω 5% 0,1W
3004Δ	4822 051 20229	22Ω 5% 0,1W
3005Δ	4822 051 20101	100Ω 5% 0,1W
3006Δ	4822 051 20101	100Ω 5% 0,1W
3007Δ	4822 051 20229	22Ω 5% 0,1W
3008Δ	4822 051 20101	100Ω 5% 0,1W
3009	4822 117 10833	10k 1% 0,1W

5000	4822 051 10008	0R00 5% 0,25W
5001	4822 051 10008	0R00 5% 0,25W
5003	4822 051 10008	0R00 5% 0,25W
5004	4822 051 10008	0R00 5% 0,25W
5005	4822 051 10008	0R00 5% 0,25W
5100	4822 157 71592	1.2µH 10%

7000	4822 209 15117	MSM5412222-30JS
7001	4822 209 91141	SAA4996H
7002	4822 209 15117	MSM5412222-30JS
7003	4822 209 15117	MSM5412222-30JS
7004	4822 209 15117	MSM5412222-30JS
7005	4822 209 91142	SAA4997H

Audio module [O] [P2]

Various

	4822 265 31248	3P male v 1,25
	4822 267 10753	4P B04B-EHP4
	4822 267 10754	12P 1-338306-2
	4822 267 10755	19P 1-338306-9)
0244	4822 267 10914	4P male v
0246	4822 265 10419	12P male F-pin
0247	4822 265 10421	19P male F-pin
0300	4822 267 10575	16P male v 2.54
0327Δ	4822 265 31251	5P male v 1,25 gy
0398	4822 265 31248	3P male v 1,25
0399	4822 265 31249	5P male v 2,5 bl
1120	4822 212 11745	Audio 2SC IST NIC SH
1120	4822 212 11864	Audio module Dolby FDS
1120	4822 212 11865	Audio module no Dolby
1350	4822 242 10434	Crystal 18,432 MHz
1600Δ	4822 071 51001	Fuse 0,1A

2340	4822 126 13473	220nF 80-20% 50V
2341	4822 126 13473	220nF 80-20% 50V
2342	4822 126 13473	220nF 80-20% 50V
2343	4822 126 13473	220nF 80-20% 50V
2350Δ	4822 126 10002	100nF 20% 25V
2352Δ	4822 124 41579	10µF 20% 50V
2353Δ	4822 124 41579	10µF 20% 50V
2354Δ	4822 124 41579	10µF 20% 50V
2355Δ	4822 124 41579	10µF 20% 50V
2356Δ	4822 124 41579	10µF 20% 50V
2357Δ	4822 124 41579	10µF 20% 50V
2358Δ	4822 124 41579	10µF 20% 50V
2359Δ	4822 124 41579	10µF 20% 50V
2360Δ	4822 124 41579	10µF 20% 50V
2361Δ	4822 124 41579	10µF 20% 50V
2362Δ	4822 124 41579	10µF 20% 50V
2363Δ	4822 124 41579	10µF 20% 50V
2364	4822 124 40769	4,7µF 20% 100V
2365Δ	4822 124 41579	10µF 20% 50V
2366	4822 124 40255	100µF 20% 63V
2367Δ	4822 124 41579	10µF 20% 50V
2368Δ	4822 124 41579	10µF 20% 50V
2369	4822 121 51252	470nF 5% 63V
2370	4822 121 51252	470nF 5% 63V
2372	4822 126 13805	68nF 10% 16V
2373Δ	5322 126 10223	4,7nF 10% 63V
2374	5322 126 10794	220pF 5% 63V
2375	5322 122 34099	470pF 10% 63V
2376	5322 122 32531	100pF 5% 50V
2377	4822 126 13805	68nF 10 16V
2378Δ	5322 126 10223	4,7nF 10% 63V
2379	5322 126 10794	220pF 5% 63V
2380	5322 122 34099	470pF 10% 63V
2381	5322 122 32531	100pF 5% 50V
2382Δ	5322 122 34123	1nF 10% 50V
2383Δ	5322 122 34123	1nF 10% 50V
2384	4822 121 51252	470nF 5% 63V
2385	4822 121 51252	470nF 5% 63V
2386Δ	5322 122 34123	1nF 10% 50V
2387Δ	5322 122 34123	1nF 10% 50V
2388Δ	5322 122 34123	1nF 10% 50V
2389Δ	5322 122 34123	1nF 10% 50V
2390Δ	5322 122 34123	1nF 10% 50V
2391Δ	4822 126 10002	100nF 20% 25V
2392	5322 122 32286	3,3pF 5% 50V
2393	5322 122 32286	3,3pF 5% 50V
2394Δ	4822 126 10002	100nF 20% 25V
2395Δ	5322 122 34123	1nF 10% 50V
2396Δ	4822 122 33172	390pF 5% 50V
2397Δ	4822 122 33172	390pF 5% 50V
2398Δ	4822 126 10002	100nF 20% 25V
2400	4822 126 13692	47pF 1% 63V
2401Δ	4822 126 10002	100nF 20% 25V
2402	5322 122 32268	470pF 10% 50V
2403	5322 122 32268	470pF 10% 50V
2404	4822 121 51252	470nF 5% 63V
2405	5322 122 32658	22pF 5% 50V
2408Δ	4822 126 10002	100nF 20% 25V
2413	4822 124 81151	22µF 50V
2415	4822 124 81151	22µF 50V
2422	4822 124 41584	100µF 20% 10V
2425	4822 124 81151	22µF 50V
2427	4822 124 81151	22µF 50V
2432	4822 124 41584	100µF 20% 10V
2436Δ	5322 122 34123	1nF 10% 50V
2436	5322 126 10511	1nF 5% 50V
2437Δ	5322 122 34123	1nF 10% 50V
2437	5322 126 10511	1nF 5% 50V
2438Δ	5322 122 34123	1nF 10% 50V
2438	5322 126 10511	1nF 5% 50V
2446	4822 126 13869	470nF 20% 16V
2447	4822 126 13869	470nF 20% 16V
2448Δ	5322 122 34123	1nF 10% 50V
2448	5322 126 10511	1nF 5% 50V
2449Δ	5322 122 34123	1nF 10% 50V
2449	5322 126 10511	1nF 5% 50V
2450	4822 126 13691	27pF 1% 63V
2452Δ	5322 126 10223	4,7nF 10% 63V
2453Δ	5322 126 10223	4,7nF 10% 63V
2454Δ	5322 126 10223	4,7nF 10% 63V
2455Δ	5322 126 10223	4,7nF 10% 63V
2487	4822 121 51252	470nF 5% 63V
2488	4822 121 51252	470nF 5% 63V
2586	5322 121 42661	330nF 5% 63V
2587	5322 121 42661	330nF 5% 63V
2588	5322 121 42661	330nF 5% 63V
2589	5322 121 42661	330nF 5% 63V
2590	4822 126 12105	33nF 5% 63V
2591Δ	5322 126 10223	4,7nF 10% 63V
2592Δ	4822 126 10002	100nF 20% 25V

2593	4822 124 41584	100µF 20% 10V
2594Δ	5322 126 10223	4,7nF 10% 63V
2595	4822 126 12105	33nF 5% 63V
2596	4822 126 13692	47pF 1% 63V
2600	4822 126 13692	47pF 1% 63V
2602Δ	4822 122 33177	10nF 20% 50V
2604Δ	4822 126 10002	100nF 20% 25V
2607Δ	4822 124 41579	10µF 20% 50V
2618	4822 122 33891	3,3nF 10% 63V
2619Δ	4822 126 10002	100nF 20% 25V
2620Δ	4822 126 10002	100nF 20% 25V
2621	4822 122 32614	1.2nF 10% 50V
2622	4822 122 32541	27nF 10% 63V
2623	4822 122 33891	3,3nF 10% 63V
2624Δ	4822 126 10002	100nF 20% 25V
2625Δ	4822 122 33893	18nF 10% 63V
2626	4822 122 32614	1.2nF 10% 50V
2627Δ	4822 124 41579	10µF 20% 50V
2628Δ	4822 124 41579	10µF 20% 50V
2629	5322 122 31863	330pF 5% 50V
2630	5322 122 31863	330pF 5% 50V
2633	5322 121 42661	330nF 5% 63V
2660	4822 126 13482	470nF 80/20% 16V
2661	4822 126 13482	470nF 80/20% 16V

3356	4822 051 20331	330Ω 5% 0,1W
3357	4822 051 20122	1k2 5% 0,1W
3358Δ	4822 051 20471	470Ω 5% 0,1W
3359	4822 117 10834	47k 1% 0,1W
3360	4822 116 83884	47k 5% 0,5W
3361	4822 116 52283	4k7 5% 0,5W
3362	4822 117 10834	47k 1% 0,1W
3363	4822 117 11449	2k2 1% 0,1W
3364Δ	4822 051 20472	4k7 5% 0,1W
3365	4822 117 10834	47k 1% 0,1W
3366	4822 051 20333	33k 5% 0,1W
3367	4822 117 10834	47k 1% 0,1W
3368	4822 051 20331	330Ω 5% 0,1W
3369	4822 051 20122	1k2 5% 0,1W
3370Δ	4822 051 20471	470Ω 5% 0,1W
3371	4822 117 10834	47k 1% 0,1W
3372	4822 116 83884	47k 5% 0,5W
3373	4822 116 52283	4k7 5% 0,5W
3374	4822 117 10834	47k 1% 0,1W
3375	4822 117 11449	2k2 1% 0,1W
3376Δ	4822 051 20472	4k7 5% 0,1W
3377	4822 117 10834	47k 1% 0,1W
3378	4822 051 20333	33k 5% 0,1W
3379	4822 117 10834	47k 1% 0,1W
3380	4822 116 52175	100Ω 5% 0,5W
3381	4822 116 52175	100Ω 5% 0,5W
3382Δ	4822 051 20332	3k3 5% 0,1W
3383Δ	4822 051 20332	3k3 5% 0,1W
3384	4822 117 10834	47k 1% 0,1W
3385	4822 051 20334	330k 5% 0,1W
3386	4822 051 20334	330k 5% 0,1W
3387Δ	4822 051 20332	3k3 5% 0,1W
3388	4822 051 20334	330k 5% 0,1W
3389Δ	4822 051 20332	3k3 5% 0,1W
3390	4822 116 52272	330k 5% 0,5W
3391	4822 117 10834	47k 1% 0,1W
3391	4822 117 11139	1k5 1% 0,1W
3391	4822 117 11449	2k2 1% 0,1W
3395Δ	4822 051 20008	0Ω jumper . (0805)
3413	4822 117 10833	10k 1% 0,1W
3414	4822 051 20822	8k2 5% 0,1W
3415	4822 117 10834	47k 1% 0,1W
3416	4822 051 10102	1k 2% 0,25W
3420	4822 117 11148	56k 1% 0,1W
3421	4822 051 20683	68k 5% 0,1W
3422	4822 116 52199	68Ω 5% 0,5W
3425	4822 117 10833	10k 1% 0,1W
3426	4822 051 20822	8k2 5% 0,1W
3427	4822 117 10834	47k 1% 0,1W
3428	4822 051 10102	1k 2% 0,25W
3430	4822 117 11148	56k 1% 0,1W
3431	4822 051 20683	68k 5% 0,1W
3432	4822 116 52199	68Ω 5% 0,5W
3433	4822 051 20331	330Ω 5% 0,1W
3441	4822 117 10833	10k 1% 0,1W
3442	4822 117 10833	10k 1% 0,1W
3443Δ	4822 051 20332	3k3 5% 0,1W
3444Δ	4822 051 20332	3k3 5% 0,1W
3550	4822 117 10833	10k 1% 0,1W
3551	4822 117 10833	10k 1% 0,1W
3589	4822 116 52175	100Ω 5% 0,5W
3590	4822 116 52175	100Ω 5% 0,5W
3602	4822 051 20104	100k 5% 0,1W
3605	4822 116 52175	100Ω 5% 0,5W
3606	4822 116 52175	100Ω 5% 0,5W
3610	4822 117 10833	10k 1% 0,1W
3613Δ	4822 051 20008	0Ω jumper . (0805)
3614Δ	4822 051 20008	0Ω jumper . (0805)
3615Δ	4822 051 20008	0Ω jumper . (0805)
3616Δ	4822 051 20008	0Ω jumper . (0805)
3617	4822 117 11449	2k2 1% 0,1W
3618	4822 051 20392	3k9 5% 0,1W
3619	4822 117 12955	2k7 1% 0,1W 0805
3620	4822 051 20182	1k8 5% 0,1W
3621	4822 117 11449	2k2 1% 0,1W
3622	4822 051 20392	3k9 5% 0,1W
3623	4822 117 12955	2k7 1% 0,1W 0805
3624	4822 051 20182	1k8 5% 0,1W
3625	4822 117 10833	10k 1% 0,1W
3626Δ	4822 051 20153	15k 5% 0,1W
3627	4822 117 11503	220Ω 1% 0.1W
3628	4822 117 11503	220Ω 1% 0.1W
3631	4822 051 10102	1k 2% 0,25W
3632	4822 051 10102	1k 2% 0,25W
3634	4822 051 10102	1k 2% 0,25W
3635	4822 051 10102	1k 2% 0,25W
4xxx	4822 051 10008	0Ω 5% 0,25W (1206)
4xxx	4822 051 20008	0Ω 5% 0,25W (0805)

5350	4822 157 53139	4,7µH 10%
5351	4822 157 53139	4,7µH 10%
5352	4822 157 53139	4,7µH 10%
5353	4822 157 53139	4,7µH 10%
5602	4822 157 53139	4,7µH 10%
5604	4822 157 53139	4,7µH 10%

6380	4822 130 82583	BZV55-C9V1
6381	4822 130 82583	BZV55-C9V1
6382	4822 130 82583	BZV55-C9V1
6384Δ	4822 130 30621	1N4148
6385	4822 130 34488	BZX79-B11
6386	4822 130 82583	BZV55-C9V1
6387	4822 130 82583	BZV55-C9V1
6388	4822 130 82583	BZV55-C9V1
6389	4822 130 82583	BZV55-C9V1
6390	4822 130 82583	BZV55-C9V1
6391	4822 130 82583	BZV55-C9V1
6392	4822 130 82583	BZV55-C9V1

7350	4822 209 15625	L78M05ABV
7350Δ	4822 209 83163	LM833N
7351Δ	4822 209 83163	LM833N
7352	5322 209 10576	HEF4053BD
7353	4822 209 14894	MPS3410B-PP-F7
7353	4822 209 16803	MSP3410D-PS-B4
7382	4822 130 60511	BC847B
7382Δ	5322 130 41982	BC848B
7383	4822 130 60511	BC847B
7383Δ	5322 130 41982	BC848B
7387	4822 130 60511	BC847B
7387Δ	5322 130 41982	BC848B
7389	4822 130 60511	BC847B
7389Δ	5322 130 41982	BC848B
7415	4822 130 60511	BC847B
7415Δ	5322 130 41982	BC848B
7420	4822 130 60511	BC847B
7420Δ	5322 130 41982	BC848B
7421	5322 130 41983	BC858B
7421	5322 130 60508	BC857B
7427	4822 130 60511	BC847B
7427Δ	5322 130 41982	BC848B
7430	4822 130 60511	BC847B
7430Δ	5322 130 41982	BC848B
7431	5322 130 41983	BC858B
7431	5322 130 60508	BC857B
7432	4822 130 60511	BC847B
7432Δ	5322 130 41982	BC848B
7590	4822 209 33293	TDA9860/V2
7600	4822 209 13606	SAA7710T/N103
7610	4822 209 13605	TDA1387T/N1
7620	4822 209 30095	LM833D
7640	4822 209 30095	LM833D
7650	5322 209 11102	HEF4052BT
7660	5322 209 11102	HEF4052BT

Combfilter [Q]

Various

	4822 265 10422	9P male 2.50 F-PIN
1340	4822 212 10316	Combfilter panel

2400Δ	4822 126 10002	100nF 20% 25V
2401Δ	4822 126 10002	100nF 20% 25V
2402Δ	4822 126 10002	100nF 20% 25V
2403Δ	4822 126 10002	100nF 20% 25V
2404Δ	4822 126 10002	100nF 20% 25V
2405Δ	4822 126 10002	100nF 20% 25V
2406Δ	4822 126 10002	100nF 20% 25V
2407Δ	4822 126 10002	100nF 20% 25V
2413	5322 122 32531	100pF 5% 50V
2414Δ	4822 126 10002	100nF 20% 25V
2415	4822 124 80283	100µF 6,3V
2416	4822 124 80283	100µF 6,3V
2417	4822 124 80283	100µF 6,3V

3402Δ	4822 051 20008	0Ω jumper . (0805)
3421	4822 117 10833	10k 1% 0,1W
3422	4822 117 10353	150Ω 1% 0,1W
3423	4822 051 20479	47Ω 5% 0,1W
4xxx	4822 051 10008	0Ω 5% 0,25W (1206)
4xxx	4822 051 20008	0Ω 5% 0,25W (0805)

5400	4822 152 20677	10µH 10%
5401	4822 152 20677	10µH 10%
5402	4822 152 20677	10µH 10%
5403	4822 157 71878	Ferrite bead
5405	4822 157 71878	Ferrite bead

7400	4822 209 12998	SAA4961/V3/S1

PIP interface panel [R]

Various

	4822 265 10787	11P ED 1,25 grey
Δ	4822 265 31251	5P ED 1,25 grey
	4822 265 10788	11P ED 1,25 black
	4822 265 41466	10P 2,5
	4822 265 31252	4P
1034	4822 212 11017	PIP interface panel

3401Δ	4822 051 20101	100Ω 5% 0,1W
3402	4822 117 11503	220Ω 1% 0.1W

7401Δ	5322 130 41982	BC848B

PIP panel [S]

Various

	4822 267 51433	10P
	4822 267 41205	4P
Δ	4822 265 31251	5P male v 1,25
1023	4822 212 10681	PIP module
1750	4822 242 81995	Crystal 3,579545 MHz
1765	4822 242 81996	Crystal 4,433619 MHz
1788	4822 242 81966	Crystal 21,05915 MHz

2759	4822 126 13473	220nF 80-20% 50V
2760	4822 126 13869	470nF 20% 16V
2761Δ	4822 124 40433	47µF 20% 25V
2762Δ	4822 126 10002	100nF 20% 25V
2766	4822 124 41643	100µF 20% 16V
2767	4822 124 40756	1µF 20% 100V
2770Δ	4822 124 40433	47µF 20% 25V
2772Δ	4822 124 40433	47µF 20% 25V
2778Δ	4822 126 10002	100nF 20% 25V
2780Δ	4822 126 10002	100nF 20% 25V
2781	4822 126 13473	220nF 80-20% 50V
2782	4822 126 13473	220nF 80-20% 50V
2784	4822 126 13473	220nF 80-20% 50V
2786Δ	4822 126 10002	100nF 20% 25V
2787	4822 126 13691	27pF 1% 63V
2788Δ	4822 126 10002	100nF 20% 25V
2789	4822 126 13691	27pF 1% 63V
2790Δ	5322 122 32654	22nF 10% 63V
2792Δ	4822 126 10002	100nF 20% 25V
2794Δ	4822 126 12944	47nF 10% 50V
2796Δ	4822 126 12944	47nF 10% 50V
2798Δ	4822 126 10002	100nF 20% 25V
2800	4822 122 33219	1,8nF 10% 50V
2802	5322 122 32531	100pF 5% 50V
2810	4822 126 13473	220nF 80-20% 50V
2812Δ	4822 126 10002	100nF 20% 25V
2816Δ	4822 126 10002	100nF 20% 25V
2821	5322 122 32287	4,7pF 5% 50V
2823	5322 122 32287	4,7pF 5% 50V
2825	5322 122 32287	4,7pF 5% 50V
2828Δ	4822 126 12944	47nF 10% 50V
2830Δ	4822 126 12944	47nF 10% 50V
2832Δ	4822 126 12944	47nF 10% 50V
2846Δ	4822 126 10002	100nF 20% 25V
2848Δ	5322 126 10223	4,7nF 10% 63V
2850Δ	5322 126 10223	4,7nF 10% 63V
2852	4822 122 33575	220pF 5% 50V
2856	4822 122 33575	220pF 5% 50V
2863	4822 122 32614	1.2nF 10% 50V
2867Δ	4822 126 10002	100nF 20% 25V
2869	4822 122 32535	680pF 10% 63V
2874Δ	5322 122 34123	1nF 10% 50V
2890	5322 122 32448	10pF 5% 50V

3755	4822 117 11503	220Ω 1% 0.1W
3762	4822 117 11503	220Ω 1% 0.1W
3764	4822 117 11503	220Ω 1% 0.1W
3766	4822 117 11503	220Ω 1% 0.1W
3800	4822 117 11448	180Ω 1% 0,1W
3802	4822 117 11503	220Ω 1% 0.1W
3804	4822 051 20391	390Ω 5% 0,1W
3806	4822 117 11503	220Ω 1% 0.1W
3820	4822 051 20104	100k 5% 0,1W
3821	4822 117 10361	680Ω 1% 0,1W
3822Δ	4822 051 20472	4k7 5% 0,1W
3823	4822 117 10361	680Ω 1% 0,1W
3824	4822 051 20681	680Ω 5% 0,1W
3825	4822 117 10361	680Ω 1% 0,1W
3826	4822 116 52283	4k7 5% 0,5W
3830	4822 051 20273	27k 5% 0,1W
3858	4822 117 11503	220Ω 1% 0.1W
3859	4822 051 20829	82Ω 5% 0,1W
3863Δ	4822 051 20471	470Ω 5% 0,1W
3864	4822 117 11503	220Ω 1% 0.1W
3869	4822 051 20391	390Ω 5% 0,1W
3870	4822 116 52175	100Ω 5% 0,5W
3872	4822 116 52175	100Ω 5% 0,5W
3873	4822 117 11448	180Ω 1% 0,1W
3874	4822 117 11507	6k8 1% 0,1W
3879	4822 051 10102	1k 2% 0,25W
3882	4822 051 20331	330Ω 5% 0,1W
3884	4822 051 20331	330Ω 5% 0,1W
3886	4822 051 20331	330Ω 5% 0,1W
3890	4822 051 10102	1k 2% 0,25W
3891	4822 116 83883	470Ω 5% 0,5W
3894	4822 051 10102	1k 2% 0,25W
3906Δ	4822 052 10229	22Ω 5% 0,33W
3914	4822 051 20822	8k2 5% 0,1W
3916	4822 051 20822	8k2 5% 0,1W
3999	4822 051 20399	39Ω 5% 0,1W
	4822 116 52175	100E 5% 0,5W
	4822 116 52175	100E 5% 0,5W
	4822 116 52175	100E 5% 0,5W
4xxx	4822 051 10008	0Ω 5% 0,25W (1206)
4xxx	4822 051 20008	0Ω 5% 0,25W (0805)

5754	4822 157 53139	4,7µH 10%
5756	4822 157 60122	4,7µH 10%
5757	4822 157 60122	4,7µH 10%
5760	4822 157 60122	4,7µH 10%
5762	4822 157 60122	4,7µH 10%

6754Δ	4822 130 30621	1N4148
6756Δ	4822 130 30621	1N4148
6758Δ	4822 130 30621	1N4148

7750	4822 209 90031	TDA8310/N1
7751	4822 209 90036	TDA8395T/N2
7762	5322 130 41983	BC858B
7764	5322 130 41983	BC858B
7766	5322 130 41983	BC858B
7788	4822 209 90026	SDA9288X-EB121
7800Δ	5322 130 41982	BC848B
7828Δ	5322 130 41982	BC848B
7858Δ	5322 130 41982	BC848B
7864Δ	5322 130 41982	BC848B

Mains switch panel [T][U]

Various

	4822 267 10913	2P male h
Δ	4822 267 10758	2P 87273-0351
Δ	4822 265 41462	7P male 1,25
	4822 265 10423	3P male
Δ	4822 256 91766	Led holder
Δ	4822 276 13592	Mains switch
1000	4822 212 11498	Mains switch panel FL6A MD2.25
1600	4822 130 91478	IR receiver

3522	4822 116 10065	VDR 1mA/495V 850V
3523Δ	4822 053 21475	4M7 5% 0,5W
3600	4822 116 52175	100Ω 5% 0,5W
3601	4822 116 52175	100Ω 5% 0,5W
3602	4822 116 52213	180Ω 5% 0,5W
3604	4822 116 52175	100Ω 5% 0,5W
3605	4822 116 52175	100Ω 5% 0,5W
3611	4822 116 52175	100Ω 5% 0,5W
3613Δ	4822 052 10109	10Ω 5% 0,33W

6600	4822 130 34174	BZX79-B4V7
6601	4822 209 72895	TLUV5320

7610	5322 130 44647	BC368

Top control panel [W] [X]

Various

	4822 265 10449	3P male h
	4822 265 10423	3P male h
	4822 276 13396	Switch
	4822 276 30422	Switch (3X assy)
1000	4822 212 11474	Top control panel FL6A MD2.25

3630	4822 116 52269	3k3 5% 0,5W
3631	4822 116 52289	5k6 5% 0,5W
3632	4822 116 52257	22k 5% 0,5W
3634	4822 116 52175	100Ω 5% 0,5W

Front I/O panel [V]

Various

	4822 267 31014	1P male h
	4822 265 41451	9P male v 1,25
	4822 267 10753	4P B04B-EHP4
	4822 256 92101	Socket headph.+cinch+SVHS
1047	4822 212 11541	Front I/O panel FL6A MD2.25
1047	4822 212 11744	Front I/O panel FL6A CL MD2.25

2800	4822 124 81151	22µF 50V
2801	4822 124 81151	22µF 50V
2804	4822 122 33805	330pF 10% 63V
2805	4822 122 33805	330pF 10% 63V
2810	4822 126 12105	33nF 5% 63V
2811	4822 124 41643	100µF 20% 16V
2813	4822 124 41576	2,2µF 20% 50V
2815	4822 126 13561	220nF 10% 16V
2816Δ	4822 126 10002	100nF 20% 25V
2817	4822 124 81151	22µF 50V
2832Δ	4822 122 33177	10nF 20% 50V
2834Δ	4822 122 33177	10nF 20% 50V

3801	4822 116 52201	75Ω 5% 0,5W
3802	4822 116 52201	75Ω 5% 0,5W
3803	4822 050 11002	1k 1% 0,4W
3804	4822 050 11002	1k 1% 0,4W
3805	4822 116 52257	22k 5% 0,5W
3806	4822 116 52257	22k 5% 0,5W
3807	4822 116 52176	10Ω 5% 0,5W
3808Δ	4822 051 20008	0Ω jumper . (0805)
3810	4822 051 20824	820k 5% 0,1W
3811	4822 051 20393	39k 5% 0,1W
3813	4822 117 11449	2k2 1% 0,1W
3814	4822 051 20392	3k9 5% 0,1W
3815	4822 051 10102	1k 2% 0,25W
3816	4822 051 10102	1k 2% 0,25W
3817	4822 051 20474	470k 5% 0,1W
3818	4822 051 10102	1k 2% 0,25W
3818	4822 050 11002	1k 1% 0,4W
3819	4822 116 83872	220Ω 5% 0,5W
3820	4822 116 52243	1k5 5% 0,5W
3830	4822 116 80173	10k 5% 0,5W
3842	4822 116 80173	10k 5% 0,5W

6801	4822 130 81513	BZV55-C6V8
6802	4822 130 81513	BZV55-C6V8
6803	4822 130 82346	BZV55-C27
6804	4822 130 82346	BZV55-C27
6805	4822 130 82346	BZV55-C27
6806	4822 130 82346	BZV55-C27
6807	4822 130 81513	BZV55-C6V8
6808	4822 130 81513	BZV55-C6V8

7811	5322 130 41983	BC858B
7812	5322 130 41983	BC858B
7815Δ	5322 130 41982	BC848B
7816	5322 130 41983	BC858B

Audio amplifier panel [AA]

Various

	4822 265 31248	3P black 1,25
Δ	4822 265 31251	5P grey 1,25
	4822 265 31246	6P male 2,5
	4822 267 31874	2P male 2,5
	4822 265 31245	4P male 2,5
Δ	4822 492 62076	Spring for transistor
1001	4822 212 11484	Audio amplifier panel

2700Δ	4822 124 41579	10µF 20% 50V
2701	4822 122 32614	1.2nF 10% 50V
2702Δ	4822 124 41579	10µF 20% 50V
2703	4822 122 32614	1.2nF 10% 50V
2704	4822 124 81082	3,3µF 20% 50V
2705	4822 122 32614	1.2nF 10% 50V
2707	4822 122 32614	1.2nF 10% 50V
2712Δ	4822 122 33893	18nF 10% 63V
2718Δ	4822 126 10002	100nF 20% 25V
2719Δ	4822 126 10002	100nF 20% 25V
2720	4822 121 51252	470nF 5% 63V
2724	4822 124 81269	120nF 10% 16V
2725	4822 126 13561	220nF 10% 16V
2728Δ	5322 122 32654	22nF 10% 63V
2734	5322 122 31863	330pF 5% 50V
2735	5322 122 31863	330pF 5% 50V
2736Δ	4822 126 10002	100nF 20% 25V
2737Δ	4822 126 10002	100nF 20% 25V
2744	4822 126 13473	220nF 80-20% 50V
2745	4822 126 13473	220nF 80-20% 50V
2746	4822 126 13473	220nF 80-20% 50V
2747	4822 126 13473	220nF 80-20% 50V
2754	4822 126 13473	220nF 80-20% 50V
2755	4822 126 13473	220nF 80-20% 50V
2756	4822 126 13473	220nF 80-20% 50V
2757	4822 126 13473	220nF 80-20% 50V
2761	4822 124 41584	100µF 20% 10V
2762Δ	4822 124 41579	10µF 20% 50V
2763	4822 124 81151	22µF 50V
2764Δ	4822 126 10002	100nF 20% 25V
2765Δ	4822 126 10002	100nF 20% 25V
2766	4822 124 41334	470µF 20% 35V
2767	4822 124 41334	470µF 20% 35V
2768Δ	4822 124 41579	10µF 20% 50V
2769Δ	4822 124 41579	10µF 20% 50V
2774	4822 126 13473	220nF 80-20% 50V
2776	4822 126 13473	220nF 80-20% 50V
2784	4822 126 13473	220nF 80-20% 50V
2786	4822 126 13473	220nF 80-20% 50V
2787Δ	4822 122 33177	10nF 20% 50V
2788	4822 124 40242	1µF 20% 63V

3700Δ	4822 051 20332	3k3 5% 0,1W
3701	4822 051 20822	8k2 5% 0,1W
3702	4822 116 52269	3k3 5% 0,5W
3703	4822 051 20822	8k2 5% 0,1W
3704Δ	4822 051 20332	3k3 5% 0,1W
3705	4822 051 20822	8k2 5% 0,1W
3706Δ	4822 051 20332	3k3 5% 0,1W
3707	4822 051 20822	8k2 5% 0,1W
3710	4822 051 20393	39k 5% 0,1W
3711	4822 051 20393	39k 5% 0,1W
3712	4822 051 20333	33k 5% 0,1W
3719	4822 051 20562	5k6 5% 0,1W 0805
3720	4822 051 20223	22k 5% 0,1W
3721Δ	4822 051 20153	15k 5% 0,1W
3722	4822 051 20182	1k8 5% 0,1W
3725	4822 117 11148	56k 1% 0,1W
3727	4822 116 83864	10k 5% 0,5W
3728	4822 117 10833	10k 1% 0,1W
3741	4822 051 20182	1k8 5% 0,1W
3742	4822 116 83961	6k8 5%
3743	4822 116 52234	100k 5% 0,5W
3744	4822 051 20828	8Ω2 5% 0,1W
3745	4822 116 52234	100k 5% 0,5W
3746Δ	4822 052 10828	8Ω2 5% 0,33W
3747	4822 051 20223	22k 5% 0,1W
3748	4822 051 20223	22k 5% 0,1W
3749	4822 116 83864	10k 5% 0,5W
3752	4822 117 11507	6k8 1% 0,1W
3753	4822 051 20104	100k 5% 0,1W
3754	4822 051 20828	8Ω2 5% 0,1W
3755	4822 051 20104	100k 5% 0,1W
3756Δ	4822 052 10828	8Ω2 5% 0,33W
3760	4822 117 10834	47k 1% 0,1W
3761	4822 117 10834	47k 1% 0,1W
3762Δ	4822 051 20471	470Ω 5% 0,1W
3763	4822 051 20104	100k 5% 0,1W
3764	4822 116 83883	470Ω 5% 0,5W
3765	4822 051 20104	100k 5% 0,1W
3766	4822 116 83872	220Ω 5% 0,5W
3767	4822 116 83872	220Ω 5% 0,5W
3768	4822 116 83872	220Ω 5% 0,5W
3769	4822 116 83872	220Ω 5% 0,5W
3771Δ	4822 051 20472	4k7 5% 0,1W
3772Δ	4822 051 20472	4k7 5% 0,1W
3775	4822 117 11503	220Ω 1% 0.1W
3776	4822 117 11503	220Ω 1% 0.1W
3799	4822 117 10833	10k 1% 0,1W
3999Δ	4822 051 20101	100Ω 5% 0,1W

6720Δ	4822 130 30621	1N4148
6721Δ	4822 130 30621	1N4148
6765	4822 130 34174	BZX79-B4V7
6768	4822 130 34278	BZX79-B6V8
6769	4822 130 34278	BZX79-B6V8

7710	4822 209 30095	LM833D
7720	4822 209 30095	LM833D
7735	5322 209 14481	HEF4053BT
7740	4822 209 32641	TDA2616Q
7750	4822 209 32641	TDA2616Q
7760Δ	5322 130 41982	BC848B
7761Δ	5322 130 41982	BC848B
7762	5322 130 60508	BC857B
7767	5322 130 60508	BC857B

Audio supply panel [AB]

Various

	4822 265 31245	4P male 2,5
	4822 267 10912	3P male v
	4822 265 31246	6P male 2,5
Δ	4822 492 62076	Spring for transistor
	4822 492 63524	Spring for transistor
Δ	4822 256 92053	Fuse holder click
	4822 310 11086	Audio supply repair kit MD2.2X
1002	4822 212 11485	Audio supply panel
1300Δ	4822 070 32002	Fuse 2A

2301	4822 124 11993	82µF 20% 400V
2302	4822 126 14109	150pF 5% 50V
2303	4822 121 41936	2,2µF 10% 100V
2304	5322 121 42386	100nF 5% 63V
2305	4822 121 10657	3,3nF 5% 2KV
2306	5322 121 42386	100nF 5% 63V
2307	4822 124 80367	1800µF 20% 35V
2308	4822 126 14153	2,2nF 10%B 1KV
2309	4822 126 14153	2,2nF 10%B 1KV
2310	4822 124 80367	1800µF 20% 35V
2313	4822 122 31168	270pF 10% 500V
2314	5322 122 32331	1nF 10% 100V
2315	5322 121 42386	100nF 5% 63V
2316	4822 126 14153	2,2nF 10%B 1KV
2317	4822 122 33293	100pF 5% 50V
2318	4822 122 33293	100pF 5% 50V
2319	4822 122 31177	470pF 10% 500V
2320	4822 122 31177	470pF 10% 500V
2321	5322 122 32331	1nF 10% 100V
2322	4822 124 40255	100µF 20% 63V
2325	4822 124 40255	100µF 20% 63V
2326	4822 124 40255	100µF 20% 63V

3300	4822 117 12681	6Ω8 5% 5W
3301	4822 117 10118	1M 5% 0,5W
3302	4822 116 83883	470Ω 5% 0,5W
3303	4822 116 52175	100Ω 5% 0,5W
3304	4822 116 83864	10k 5% 0,5W
3305	4822 116 83872	220Ω 5% 0,5W
3306	4822 116 52179	12Ω 5% 0,5W
3307	4822 116 52297	68k 5% 0,5W
3308	4822 116 83882	39k 5% 0,5W
3309	4822 116 83961	6k8 5%
3310	4822 116 52269	3k3 5% 0,5W
3311	4822 101 11187	1k 30%LIN 0,1W
3312	4822 116 52283	4k7 5% 0,5W
3313	4822 116 52283	4k7 5% 0,5W
3314	4822 116 52276	3k9 5% 0,5W
3315	4822 116 52244	15k 5% 0,5W
3316	4822 050 11002	1k 1% 0,4W
3317	4822 116 52191	33Ω 5% 0,5W
3318	4822 116 52175	100Ω 5% 0,5W
3319	4822 116 52249	1k8 5% 0,5W
3320	4822 116 52249	1k8 5% 0,5W
3321	4822 116 83884	47k 5% 0,5W
3322	4822 116 52303	8k2 5% 0,5W
3323	4822 116 83868	150Ω 5% 0,5W
3325	4822 116 83864	10k 5% 0,5W
3326	4822 116 52303	8k2 5% 0,5W
3327	4822 116 52179	12Ω 5% 0,5W
3329	4822 117 12682	150Ω 5% 5W
3331	4822 116 52175	100Ω 5% 0,5W
3332	4822 116 83882	39k 5% 0,5W
3333	4822 116 52249	1k8 5% 0,5W
3334	4822 116 52249	1k8 5% 0,5W
3335	4822 116 52249	1k8 5% 0,5W
3336	4822 116 83961	6k8 5%
3337	4822 116 52195	47Ω 5% 0,5W
3338	4822 116 52303	8k2 5% 0,5W
3339	4822 116 83872	220Ω 5% 0,5W
3340	4822 116 83868	150Ω 5% 0,5W
3341	4822 116 52263	2k7 5% 0,5W
3342	4822 116 52231	820Ω 5% 0,5W
3343	4822 116 52195	47Ω 5% 0,5W
3344	4822 116 83882	39k 5% 0,5W
3345	4822 116 52206	120Ω 5% 0,5W
3346Δ	4822 117 11744	0Ω22 5% 1W
3347	4822 116 52175	100Ω 5% 0,5W
3348	4822 116 52303	8k2 5% 0,5W
3349Δ	4822 052 10108	1Ω 5% 0,33W
3398	4822 116 52206	120Ω 5% 0,5W

5302	4822 157 70436	8,2µH
5303	4822 157 60153	IND FXD 8RBH S 2
5305	4822 146 10743	SM TRANSFORMER
5319	4822 152 20678	33µH
5320	4822 152 20678	33µH
5333	4822 157 71457	33µH 10%
5334	4822 152 20678	33µH
5335	4822 157 71457	33µH 10%

6301Δ	4822 130 31933	1N5061
6302Δ	4822 130 31933	1N5061
6303Δ	4822 130 31933	1N5061
6304Δ	4822 130 31933	1N5061
6305Δ	4822 130 30621	1N4148
6307	4822 130 42488	BYD33D
6308Δ	4822 130 30621	1N4148
6309Δ	4822 130 30621	1N4148
6310	4822 130 80983	BYW29F-150
6311	4822 130 34167	BZX79-B6V2
6312	4822 130 80983	BYW29F-150
6313	4822 130 42488	BYD33D
6314Δ	4822 130 30621	1N4148
6315Δ	4822 130 30621	1N4148
6316Δ	4822 130 30621	1N4148
6317Δ	4822 130 30621	1N4148
6318Δ	4822 130 30621	1N4148
6319Δ	4822 130 30621	1N4148
6320	4822 130 83825	BY328/20
6321	4822 130 30862	BZX79-B9V1
6322Δ	4822 130 30621	1N4148
6323Δ	4822 130 30621	1N4148
6324Δ	4822 130 31933	1N5061
6325Δ	4822 130 31933	1N5061
6326Δ	4822 130 30621	1N4148
6327Δ	4822 130 30621	1N4148
6328Δ	4822 130 34173	BZX79-B5V6
6329	4822 130 42488	BYD33D
6330Δ	4822 130 30621	1N4148
6331Δ	4822 130 34197	BZX79-B12
6332Δ	4822 130 30621	1N4148
6333Δ	4822 130 30621	1N4148
6334Δ	4822 130 31983	BAT85
6335	4822 130 42488	BYD33D
6336Δ	4822 130 31933	1N5061
6337	4822 130 42488	BYD33D

7300	4822 130 40855	BC337
7301Δ	4822 130 10834	CNY17-4 OPTION 6
7302Δ	4822 130 61265	BU508AF
7303	4822 130 44568	BC557B
7304Δ	4822 130 44503	BC547C

7305	4822 130 40959	BC547B
7306	4822 130 40959	BC547B
7310Δ	4822 130 42231	BC557C
7311	5322 130 44647	BC368
7312	4822 130 40959	BC547B
7314	5322 209 81148	MC78L12ACP
7315	4822 130 40855	BC337

FDS module [AC]

Various

E9F1	4822 210 20338	UV1216D/PH
FL90	4822 242 10307	OFWG3956M
FL91	4822 242 81436	OFWK3953M
FL92	4822 242 70824	OFWG1956M
FL93	4822 242 81854	OFWG9353M
FL94	4822 242 82062	OFWL9454M
P9A1	4822 212 11188	FDS module
X9K1	4822 242 81485	Crystal 3.58MHz
X9K2	4822 242 81486	Crystal 4.43MHz
X9T0	4822 242 73622	Crystal 5,5MHz
X9T1	4822 242 72187	Crystal 6,0MHz
X9T2	4822 242 81665	Crystal 6.5MHz
X9T3	4822 242 10747	Crystal 4.5MHz
X9T4	4822 242 71825	Crystal 4,5MHz
X9T5	4822 242 81572	Crystal 6,0MHz
X9T6	4822 242 81572	Crystal 6,0MHz

C921	5322 126 11583	10nF 10% 50V 0603
C923	5322 126 11583	10nF 10% 50V 0603
C925	4822 126 11704	0.022µF
C926	4822 126 11685	4700pF
C9A1	4822 126 11687	0.1µF +80 -20%
C9A2	4822 126 11687	0.1µF +80 -20%
C9A3	4822 126 11687	0.1µF +80 -20%
C9A4	4822 126 11687	0.1µF +80 -20%
C9A5	4822 126 11687	0.1µF +80 -20%
C9A6	4822 126 11687	0.1µF +80 -20%
C9A7	4822 126 11687	0.1µF +80 -20%
C9A8	4822 126 11687	0.1µF +80 -20%
C9A9	4822 126 11687	0.1µF +80 -20%
C9B0	4822 126 11687	0.1µF +80 -20%
C9B1	4822 124 11074	10µF 16V
C9B2	4822 126 11687	0.1µF +80 -20%
C9B3	4822 124 11074	10µF 16V
C9B5	4822 124 11074	10µF 16V
C9B6	4822 126 11687	0.1µF +80 -20%
C9B7	4822 124 11074	10µF 16V
C9B8	4822 126 11687	0.1µF +80 -20%
C9B9	4822 126 11687	0.1µF +80 -20%
C9C0	4822 126 11687	0.1µF +80 -20%
C9C1	4822 126 11687	0.1µF +80 -20%
C9C2	4822 126 11687	0.1µF +80 -20%
C9C3	4822 126 11687	0.1µF +80 -20%
C9C4	4822 126 11687	0.1µF +80 -20%
C9C5	4822 126 11687	0.1µF +80 -20%
C9C6	4822 126 11687	0.1µF +80 -20%
C9C7	4822 126 11687	0.1µF +80 -20%
C9C8	4822 126 11687	0.1µF +80 -20%
C9C9	4822 124 11074	10µF 16V
C9D0	4822 126 11687	0.1µF +80 -20%
C9D1	4822 126 11687	0.1µF +80 -20%
C9D2	4822 126 11687	0.1µF +80 -20%
C9D3	4822 126 11687	0.1µF +80 -20%
C9D4	4822 126 11687	0.1µF +80 -20%
C9D5	4822 126 11687	0.1µF +80 -20%
C9D6	4822 126 11687	0.1µF +80 -20%
C9D7	4822 124 11074	10µF 16V
C9D8	4822 122 33777	47pF 5% 63V
C9D9	4822 122 33777	47pF 5% 63V
C9E0	4822 126 11687	0.1µF +80 -20%
C9E1	4822 126 11687	0.1µF +80 -20%
C9E2	4822 126 11687	0.1µF +80 -20%
C9E3	4822 126 11687	0.1µF +80 -20%
C9E4	4822 124 41842	47µF
C9E5	4822 122 33753	150pF 5% 50V
C9E6	4822 122 33753	150pF 5% 50V
C9E7	4822 126 13267	330pF 10%
C9E8	4822 126 13267	330pF 10%
C9E9	4822 122 33753	150pF 5% 50V
C9F0	4822 124 10772	100µF 6.3V
C9F1	4822 124 41842	47µF
C9F2	4822 126 11687	0.1µF +80 -20%
C9F3	4822 126 11687	0.1µF +80 -20%
C9F4	4822 124 10772	100µF 6.3V
C9F5	5322 126 11583	10nF 10% 50V 0603
C9F6	5322 126 11583	10nF 10% 50V 0603
C9F7	5322 126 11583	10nF 10% 50V 0603
C9F9	5322 126 11583	10nF 10% 50V 0603
C9G1	4822 122 33785	68pF 5% 50V
C9G2	4822 126 11659	3pF
C9G3	5322 126 11583	10nF 10% 50V 0603
C9G5	4822 126 11687	0.1µF +80 -20%
C9G6	5322 126 11583	10nF 10% 50V 0603
C9G7	5322 126 11583	10nF 10% 50V 0603
C9G8	5322 126 11583	10nF 10% 50V 0603
C9G9	5322 126 11583	10nF 10% 50V 0603
C9H0	4822 126 11687	0.1µF +80 -20%
C9H1	4822 126 11687	0.1µF +80 -20%
C9H4	4822 124 41842	47µF
C9H5	5322 126 11583	10nF 10% 50V 0603
C9H6	4822 122 33782	56pF 50V
C9J0	4822 126 11687	0.1µF +80 -20%
C9J1	4822 126 11687	0.1µF +80 -20%
C9J2	4822 126 11687	0.1µF +80 -20%
C9J3	4822 126 11687	0.1µF +80 -20%
C9J5	4822 126 11687	0.1µF +80 -20%
C9J7	4822 126 11687	0.1µF +80 -20%
C9J8	4822 126 11687	0.1µF +80 -20%
C9J9	4822 126 11687	0.1µF +80 -20%
C9K2	4822 126 11687	0.1µF +80 -20%
C9K3	4822 126 11687	0.1µF +80 -20%
C9K4	4822 126 11687	0.1µF +80 -20%
C9K6	4822 126 11687	0.1µF +80 -20%
C9K7	4822 122 33757	18pF 5% 50V
C9K8	4822 122 33752	15pF 5% 50V
C9K9	4822 126 11687	0.1µF +80 -20%
C9L0	4822 126 11687	0.1µF +80 -20%
C9L1	4822 124 41842	47µF
C9L2	4822 126 11687	0.1µF +80 -20%
C9M1	4822 124 41842	47µF
C9M6	4822 126 14101	0,22µF
C9M7	4822 126 11687	0.1µF +80 -20%
C9M8	4822 122 33753	150pF 5% 50V
C9M9	4822 122 33753	150pF 5% 50V
C9N0	4822 124 41842	47µF
C9N1	4822 126 11687	0.1µF +80 -20%
C9N2	4822 126 11687	0.1µF +80 -20%
C9N3	4822 124 41842	47µF
C9T0	4822 124 11074	10µF 16V
C9T1	5322 126 11583	10nF 10% 50V 0603
C9T2	5322 126 11583	10nF 10% 50V 0603
C9T3	5322 126 11583	10nF 10% 50V 0603
C9T4	5322 126 11583	10nF 10% 50V 0603
C9T5	5322 126 11583	10nF 10% 50V 0603
C9T9	4822 126 11687	0.1µF +80 -20%
C9Y0	4822 122 33753	150pF 5% 50V

R901	4822 051 30008	0Ω jumper
R902	4822 051 30008	0Ω jumper
R910	4822 051 30103	10k 5% 0,062W
R911	4822 051 30103	10k 5% 0,062W
R922	4822 051 30101	100Ω 5% 0,062W
R923	4822 051 30101	100Ω 5% 0,062W
R924	4822 051 30103	10k 5% 0,062W
R925	4822 051 30153	15k 5% 0,062W
R926	4822 051 30101	100Ω 5% 0,062W
R927	4822 051 30101	100Ω 5% 0,062W
R928	4822 051 30473	47k 5% 0,062W
R929	4822 051 30473	47k 5% 0,062W
R930	4822 051 30101	100Ω 5% 0,062W
R931	4822 051 30473	47k 5% 0,062W
R932	4822 051 30223	22k 5% 0,062W
R933	4822 051 30473	47k 5% 0,062W
R934	4822 051 30103	10k 5% 0,062W
R935	4822 051 30103	10k 5% 0,062W
R937	4822 051 30008	0Ω jumper
R939	4822 051 30332	3k3 5% 0,062W
R940	4822 051 30332	3k3 5% 0,062W
R941	4822 051 30222	2k2 5% 0,062W
R942	4822 051 30332	3k3 5% 0,062W
R9A3	4822 051 30103	10k 5% 0,062W
R9A4	4822 051 30103	10k 5% 0,062W
R9A5	4822 051 30101	100Ω 5% 0,062W
R9A6	4822 051 30101	100Ω 5% 0,062W
R9A7	4822 051 30101	100Ω 5% 0,062W
R9A8	4822 051 30103	10k 5% 0,062W
R9A9	4822 051 30221	220Ω 5% 0,062W
R9B0	4822 051 30681	680Ω 5% 0,062W
R9B3	4822 051 30479	47Ω 5% 0,062W
R9B4	4822 051 30151	150Ω 5% 0,062W
R9B5	4822 051 30151	150Ω 5% 0,062W
R9B6	4822 051 30151	150Ω 5% 0,062W
R9C5	4822 051 30008	0Ω jumper
R9C7	4822 051 30331	330Ω 5% 0,062W
R9C8	4822 051 30331	330Ω 5% 0,062W
R9C9	4822 051 30151	150Ω 5% 0,062W
R9D0	4822 051 30151	150Ω 5% 0,062W
R9D1	4822 051 30331	330Ω 5% 0,062W
R9D2	4822 051 30331	330Ω 5% 0,062W
R9D3	4822 051 30479	47Ω 5% 0,062W
R9D4	4822 117 12139	22Ω 5% 0,062W
R9D8	4822 051 30008	0Ω jumper
R9D9	4822 051 30008	0Ω jumper
R9F1	4822 051 30103	10k 5% 0,062W
R9F2	4822 051 30103	10k 5% 0,062W
R9F3	4822 051 30333	33k 5% 0,062W
R9F4	4822 051 30223	22k 5% 0,062W
R9F6	4822 051 30101	100Ω 5% 0,062W
R9F7	4822 051 30101	100Ω 5% 0,062W
R9F8	4822 051 30472	4k7 5% 0,062W
R9F9	4822 051 30472	4k7 5% 0,062W
R9G0	4822 051 30332	3k3 5% 0,062W
R9G1	4822 051 30472	4k7 5% 0,062W
R9G2	4822 051 30222	2k2 5% 0,062W
R9G3	4822 051 30332	3k3 5% 0,062W
R9G4	4822 051 30222	2k2 5% 0,062W
R9G5	4822 051 30479	47Ω 5% 0,062W
R9G6	4822 051 30332	3k3 5% 0,062W
R9G7	4822 051 30332	3k3 5% 0,062W
R9G8	4822 051 30103	10k 5% 0,062W
R9G9	4822 051 30103	10k 5% 0,062W
R9H0	4822 051 30332	3k3 5% 0,062W
R9H1	4822 051 30103	10k 5% 0,062W
R9H2	4822 051 30103	10k 5% 0,062W
R9H3	4822 051 30103	10k 5% 0,062W
R9H4	4822 051 30103	10k 5% 0,062W
R9H5	4822 101 11725	50k
R9H6	4822 051 30123	12k 5% 0,062W
R9H8	4822 051 30151	150Ω 5% 0,062W
R9H9	4822 051 30331	330Ω 5% 0,062W
R9J0	4822 051 30101	100Ω 5% 0,062W
R9J1	4822 051 30101	100Ω 5% 0,062W
R9J2	4822 051 30223	22k 5% 0,062W
R9J3	4822 051 30683	68k 5% 0,062W
R9J4	4822 051 30105	1M 5% 0,062W
R9J5	4822 051 30105	1M 5% 0,062W
R9J6	4822 051 30105	1M 5% 0,062W
R9J7	4822 051 30105	1M 5% 0,062W
R9K1	4822 051 30221	220Ω 5% 0,062W
R9K2	4822 051 30222	2k2 5% 0,062W
R9K8	4822 051 30103	10k 5% 0,062W
R9L2	4822 051 30102	1k 5% 0,062W
R9L3	4822 051 30222	2k2 5% 0,062W
R9L5	4822 051 30101	100Ω 5% 0,062W
R9L6	4822 051 30101	100Ω 5% 0,062W
R9L7	4822 051 30102	1k 5% 0,062W
R9L8	4822 051 30222	2k2 5% 0,062W
R9L9	4822 051 30102	1k 5% 0,062W
R9M1	4822 051 30008	0Ω jumper
R9M3	4822 051 30471	470Ω 5% 0,062W
R9M4	4822 051 30152	1k5 5% 0,062W
R9M5	4822 051 30681	680Ω 5% 0,062W
R9M6	4822 051 30221	220Ω 5% 0,062W
R9M7	4822 051 30102	1k 5% 0,062W
R9M9	4822 051 30008	0Ω jumper
R9N1Δ	4822 116 60318	RESISTOR
R9N2	4822 051 30102	1k 5% 0,062W
R9N3	4822 051 30101	100Ω 5% 0,062W
R9N4	4822 051 30151	150Ω 5% 0,062W
R9N5	4822 051 30008	0Ω jumper
R9N8	4822 051 30008	0Ω jumper
R9N9	4822 051 30008	0Ω jumper
R9T0	4822 051 30103	10k 5% 0,062W
R9T1	4822 051 30103	10k 5% 0,062W
R9T2	4822 051 30103	10k 5% 0,062W
R9T3	4822 051 30681	680Ω 5% 0,062W
R9T4	4822 051 30681	680Ω 5% 0,062W
R9T5	4822 051 30681	680Ω 5% 0,062W
R9T6	4822 051 30681	680Ω 5% 0,062W
R9T7	4822 051 30221	220Ω 5% 0,062W
R9T9	4822 051 30103	10k 5% 0,062W
R9V1	4822 051 30103	10k 5% 0,062W
R9V2	4822 051 30008	0Ω jumper
R9V4	4822 051 30181	180Ω 5% 0,062W
R9V5	4822 051 30683	68k 5% 0,062W
R9V6	4822 051 30473	47k 5% 0,062W
R9V7	4822 051 30332	3k3 5% 0,062W
R9V8	4822 051 30222	2k2 5% 0,062W
R9V9	4822 051 30332	3k3 5% 0,062W
R9W0	4822 051 30332	3k3 5% 0,062W
R9W2	4822 051 30152	1k5 5% 0,062W
R9W3	4822 051 30102	1k 5% 0,062W
R9W4	4822 051 30332	3k3 5% 0,062W
R9W6	4822 051 30331	330Ω 5% 0,062W
R9W7	4822 051 30471	470Ω 5% 0,062W
R9W8	4822 051 30222	2k2 5% 0,062W
R9W9	4822 051 30102	1k 5% 0,062W
R9Z0	4822 051 30008	0Ω jumper
R9Z1	4822 051 30008	0Ω jumper
R9Z2	4822 051 30008	0Ω jumper
R9Z3	4822 051 30474	470k 5% 0,062W
R9Z4	4822 051 30474	470k 5% 0,062W
R9Z5	4822 051 30103	10k 5% 0,062W
R9Z6	4822 051 30103	10k 5% 0,062W
R9Z7	4822 051 30103	10k 5% 0,062W
R9Z8	4822 051 30473	47k 5% 0,062W
FL99	4822 157 11157	BLM21A05PT
FL9A	4822 157 11157	BLM21A05PT
FL9B	4822 157 11157	BLM21A05PT
FL9C	4822 157 11157	BLM21A05PT
FL9D	4822 157 11157	BLM21A05PT
FL9E	4822 157 11157	BLM21A05PT
FL9F	4822 157 11157	BLM21A05PT
FL9G	4822 157 11157	BLM21A05PT
FL9J	4822 157 11157	BLM21A05PT
FL9K	4822 157 11157	BLM21A05PT
FL9L	4822 157 11157	BLM21A05PT
FL9N	4822 157 11157	BLM21A05PT
FL9P	4822 157 11157	BLM21A05PT
FL9R	4822 157 11157	BLM21A05PT
FL9T	4822 157 11157	BLM21A05PT
FL9U	4822 157 71208	Ferrite bead
FL9V	4822 157 71208	Ferrite bead
FL9W	4822 157 71208	Ferrite bead

L9A0	4822 157 11243	NL322522-4R7M
L9A1	4822 157 11243	NL322522-4R7M
L9F1	4822 157 11242	NL322522-R33M 0.33µH
L9F2	4822 157 11238	292GNS-A716EL()
L9F3	4822 157 11244	NL322522 8.2µH
L9F4	4822 157 11241	NL322522-100K 10µH
L9F5	4822 157 11241	NL322522-100K 10µH
L9F6	4822 157 11241	NL322522-100K 10µH
L9F7	4822 157 11239	292GEAS-A693GJ()
L9F8	4822 157 11237	600GNS-7230X(7KL)

D9G0	4822 130 10873	1SS314
D9G1	4822 130 10873	1SS314
D9G2	4822 130 10873	1SS314
D9G3	4822 130 10873	1SS314
D9G4	4822 130 10873	1SS314
D9G5	4822 130 10873	1SS314
D9G6	4822 130 10873	1SS314
D9G7	4822 130 10873	1SS314
D9G8	4822 130 10873	1SS314
D9G9	4822 130 10873	1SS314
D9T0	4822 130 10873	1SS314
D9T1	4822 130 10873	1SS314
Z9F0	4822 130 10801	02CZ33
Z9N0	4822 130 81169	02CZ5.6-Y
IC9A	4822 209 15276	SAB9077/3
IC9E	4822 209 15275	UPD482234LE70
IC9J	4822 209 12942	TDA9143/N1
IC9K	4822 209 13028	TDA4665T/V4
IC9L	4822 209 62605	MC14053BF
IC9N	5322 209 33172	PCF8574AT
IC9P	4822 209 62605	MC14053BF
IC9R	4822 209 33707	TDA9815/V3

Q920	4822 130 63598	2SA1586
Q921	4822 130 61541	2SC4116(YGL)
Q922	4822 130 61541	2SC4116(YGL)
Q9A0	4822 130 61541	2SC4116(YGL)
Q9F1	4822 130 61541	2SC4116(YGL)
Q9F2	4822 130 61541	2SC4116(YGL)
Q9F3	4822 130 61541	2SC4116(YGL)
Q9F5	4822 130 63598	2SA1586
Q9F6	4822 130 61541	2SC4116(YGL)
Q9M1	4822 130 61541	2SC4116(YGL)
Q9M2	4822 130 61541	2SC4116(YGL)
Q9M3	4822 130 63598	2SA1586
Q9M4	4822 130 63598	2SA1586
Q9N0	4822 130 61425	2SC2873
Q9N1	4822 130 10874	BUK482-60A
Q9N2	4822 130 61541	2SC4116(YGL)
Q9N3	4822 130 61541	2SC4116(YGL)

YUV interface [AD]

Various

1365	4822 212 11189	YUV Interface

C9Z0	4822 124 11074	10µF 16V

R9X0	4822 051 30221	220Ω 5% 0,062W
R9X1	4822 051 30222	2k2 5% 0,062W
R9X2	4822 051 30221	220Ω 5% 0,062W
R9X3	4822 051 30222	2k2 5% 0,062W
R9X4	4822 051 30221	220Ω 5% 0,062W
R9X5	4822 051 30222	2k2 5% 0,062W
R9Y0	4822 051 30008	0Ω jumper
R9Y1	4822 051 30008	0Ω jumper
R9Y2	4822 051 30008	0Ω jumper
R9Y3	4822 051 30008	0Ω jumper
R9Y4	4822 051 30008	0Ω jumper
R9Y5	4822 051 30008	0Ω jumper
R9Y6	4822 051 30008	0Ω jumper
R9Y7	4822 051 30008	0Ω jumper
R9Y8	4822 051 30008	0Ω jumper
R9Y9	4822 051 30104	100k 5% 0,062W
FL9X	4822 157 11157	BLM21A05PT
IC9V	4822 209 62605	MC14053BF

Q9X0	4822 130 63598	2SA1586
Q9X1	4822 130 63598	2SA1586
Q9X2	4822 130 63598	2SA1586

Surround sound transmitter [AE1]

Various

	4822 212 11199	433MHz transmitter
	4822 212 11742	864MHz transmitter
1403	4822 212 11743	864MHz modulator
1403	4822 218 11567	433MHz modulator
1407	4822 265 31249	5P black 2,5
1415	4822 265 31248	3P grey 1,25

2110	5322 122 31873	2,7pF +-0,5 100V
2119	4822 126 13691	27pF 1% 63V
2120	5322 122 31873	2,7pF +-0,5 100V
2121	5322 122 32448	10pF 5% 50V
2122	4822 122 33575	220pF 5% 50V
2123	5322 122 32287	4,7pF 5% 50V
2124	5322 122 32967	5,6pF 10% 63V
2126	5322 122 31873	2,7pF +-0,5 100V
2127	4822 122 33575	220pF 5% 50V
2128	4822 122 33575	220pF 5% 50V
2129	4822 122 33575	220pF 5% 50V
2130	5322 122 32967	5,6pF 10% 63V
2132	5322 122 32287	4,7pF 5% 50V
2133	4822 122 33575	220pF 5% 50V
2135	5322 122 32269	6,8pF 5% 50V
2136	4822 122 33575	220pF 5% 50V
2137	4822 122 33336	8,2nF 10% 50V
2138	4822 123 14018	10V.10% 2U2
2139	4822 126 13689	18pF 1% 63V
2140	4822 122 33336	8,2nF 10% 50V
2141	5322 122 32448	10pF 5% 50V
2142Δ	5322 122 32654	22nF 10% 63V
2143	4822 122 33575	220pF 5% 50V
2144	5322 122 32659	33pF 5% 50V
2145	5322 122 32659	33pF 5% 50V
2146	4822 126 13692	47pF 1% 63V
2147	4822 122 33336	8,2nF 10% 50V
2401Δ	4822 124 41579	10µF 20% 50V
2402	4822 124 41969	1µF 20% 50V
2404	4822 124 40242	1µF 20% 63V
2406Δ	5322 126 10223	4,7nF 10% 63V
2408Δ	4822 124 41579	10µF 20% 50V
2410	4822 124 41576	2,2µF 20% 50V
2412	4822 121 51252	470nF 5% 63V
2412	4822 121 51319	1µF 10% 63V
2414	4822 124 41576	2,2µF 20% 50V
2416	4822 124 41576	2,2µF 20% 50V
2418Δ	4822 124 41579	10µF 20% 50V
2420	4822 124 23624	47µF 20% 16V
2421	4822 126 13692	47pF 1% 63V
2423	4822 126 13692	47pF 1% 63V
2425Δ	5322 122 32654	22nF 10% 63V
2427	4822 122 33336	8,2nF 10% 50V
2429	4822 126 13692	47pF 1% 63V
2430	4822 124 40242	1µF 20% 63V
2432	4822 126 13692	47pF 1% 63V
2435	4822 122 33216	270pF 5% 50V
2435	5322 122 32659	33pF 5% 50V
2436	4822 122 33325	470nF 16V
2437Δ	5322 122 34123	1nF 10% 50V
2438Δ	5322 122 34123	1nF 10% 50V
2439	4822 126 13694	68pF 1% 63V
2439	5322 122 32531	100pF 5% 50V
2440Δ	4822 122 33177	10nF 20% 50V
2442	4822 124 23624	47µF 20% 16V
2444	5322 122 32531	100pF 5% 50V
2445	4822 126 13692	47pF 1% 63V
2447Δ	4822 124 40196	220µF 20% 16V
2448	4822 122 32646	5,6nF 10% 50V
2449	4822 124 23624	47µF 20% 16V
2460	4822 126 13692	47pF 1% 63V
2462	5322 122 32531	100pF 5% 50V
2481Δ	4822 126 13838	100nF 50V 20%
2482Δ	4822 126 13838	100nF 50V 20%
2486Δ	4822 126 13838	100nF 50V 20%
2487Δ	5322 122 32654	22nF 10% 63V

3001Δ	4822 052 10478	4Ω7 5% 0,33W
3139	4822 117 10834	47k 1% 0,1W
3140	4822 117 10965	18k 1% 0,1W
3141	4822 051 20333	33k 5% 0,1W
3142Δ	4822 051 20471	470Ω 5% 0,1W
3143	4822 117 10834	47k 1% 0,1W
3144Δ	4822 051 20101	100Ω 5% 0,1W
3145	4822 051 20331	330Ω 5% 0,1W
3146	4822 051 20104	100k 5% 0,1W
3147Δ	4822 051 20101	100Ω 5% 0,1W
3148Δ	4822 051 20101	100Ω 5% 0,1W
3149	4822 051 20223	22k 5% 0,1W
3150	4822 051 20223	22k 5% 0,1W
3151	4822 051 20273	27k 5% 0,1W
3152	4822 117 10353	150Ω 1% 0,1W
3153	4822 117 11139	1k5 1% 0,1W
3154	4822 117 10833	10k 1% 0,1W
3155	4822 051 20223	22k 5% 0,1W
3400Δ	4822 052 10478	4Ω7 5% 0,33W
3402	4822 051 20223	22k 5% 0,1W
3403	4822 051 20223	22k 5% 0,1W
3404	4822 051 20223	22k 5% 0,1W
3406	4822 117 10965	18k 1% 0,1W
3407	4822 117 10965	18k 1% 0,1W
3408	4822 117 11449	2k2 1% 0,1W
3410Δ	4822 051 20472	4k7 5% 0,1W
3412	4822 117 10834	47k 1% 0,1W
3414Δ	4822 051 20153	15k 5% 0,1W
3416Δ	4822 051 20332	3k3 5% 0,1W
3418	4822 051 10102	1k 2% 0,25W
3419	4822 051 10102	1k 2% 0,25W
3422	4822 117 10965	18k 1% 0,1W
3424	4822 117 10965	18k 1% 0,1W
3426	4822 051 10102	1k 2% 0,25W
3428Δ	4822 051 20472	4k7 5% 0,1W
3429Δ	4822 051 20229	22Ω 5% 0,1W
3430	4822 117 10834	47k 1% 0,1W
3432	4822 117 11148	56k 1% 0,1W
3439Δ	4822 051 20229	22Ω 5% 0,1W
3440	4822 117 10833	10k 1% 0,1W
3441	4822 051 20104	100k 5% 0,1W
3442	4822 100 11348	1k 30%lin 0,1W
3443	4822 051 20105	1M 5% 0,1W
3444	4822 051 20105	1M 5% 0,1W
3445Δ	4822 051 20472	4k7 5% 0,1W
3446	4822 117 10833	10k 1% 0,1W
3447	4822 117 10833	10k 1% 0,1W
3448	4822 051 20104	100k 5% 0,1W
3449	4822 117 10833	10k 1% 0,1W
3450	4822 051 20104	100k 5% 0,1W
3451	4822 051 20273	27k 5% 0,1W
3452	4822 117 10834	47k 1% 0,1W
3453Δ	4822 051 20472	4k7 5% 0,1W
3454Δ	4822 051 20471	470Ω 5% 0,1W
3458	4822 117 11503	220Ω 1% 0.1W
3459	4822 117 11503	220Ω 1% 0.1W
3462Δ	4822 051 20332	3k3 5% 0,1W
3464	4822 051 20223	22k 5% 0,1W
3473	4822 051 20122	1k2 5% 0,1W
3474	4822 051 20391	390Ω 5% 0,1W
3480Δ	4822 051 20472	4k7 5% 0,1W
3482	4822 051 20333	33k 5% 0,1W
3484	4822 117 10833	10k 1% 0,1W
3486Δ	4822 051 20471	470Ω 5% 0,1W
3490Δ	4822 051 20472	4k7 5% 0,1W
3501Δ	4822 051 20101	100Ω 5% 0,1W
3502Δ	4822 051 20101	100Ω 5% 0,1W
3504Δ	4822 051 20472	4k7 5% 0,1W
3505Δ	4822 051 20471	470Ω 5% 0,1W
3507	4822 117 11503	220Ω 1% 0.1W
4xxx	4822 051 10008	0Ω 5% 0,25W (1206)
4xxx	4822 051 20008	0Ω 5% 0,25W (0805)

5104Δ	4822 157 71206	BLM21A601SPT
5108Δ	4822 157 71206	BLM21A601SPT
5403	4822 157 11689	50KHZ TUNING
5403	4822 242 81014	Crystal 38,OKHz
5404	4822 157 11172	CHIP INDUCTOR 68nH
5405	4822 157 11172	CHIP INDUCTOR 68nH

6134	4822 130 83614	BB135
6135	5322 130 34337	BAV99
6401Δ	5322 130 31928	BAS16
6407	4822 130 10794	BZX284-C10

7107	5322 130 60647	4-624
7401	4822 209 83357	NJM4560M JRC
7402	4822 209 83357	NJM4560M JRC
7403	4822 209 31136	SA572N
7404	5322 209 11517	PC74HCU04T
7405	4822 130 60511	BC847B
7406	4822 130 60511	BC847B
7410	4822 130 60511	BC847B
7414Δ	4822 209 33083	L7808CV
7419	4822 130 60511	BC847B
7421	4822 130 60511	BC847B
7422	4822 130 60511	BC847B
7423	4822 130 60511	BC847B

Surround sound supply+amplifier [AE2]

Various

1001	4822 212 11201	Supply + amplifier panel
1250	4822 267 10565	4P male v 2,5
1251	4822 267 10566	1P cinch
1260	4822 267 10567	4P male h 2,5
1263	4822 267 10573	8P male h 2,5
1313	4822 267 10574	8P male v 2,5
1315Δ	4822 276 13224	Mains switch
1316Δ	4822 265 20723	2P male v 7,92
1317Δ	4822 265 20723	2P male v 7,92
1318Δ	4822 265 31015	Socket support AC
1320Δ	4822 071 52502	Fuse 2,5A
1376	4822 265 10872	2P female h

2260Δ	4822 124 41579	10µF 20% 50V
2261	4822 124 41584	100µF 20% 10V
2262	4822 124 11909	25V 470µF 20%
2264Δ	4822 122 33195	100pF 10% 50V
2265	5322 121 42386	100nF 5% 63V
2266	5322 121 42386	100nF 5% 63V
2268	5322 121 42386	100nF 5% 63V
2269	4822 121 51252	470nF 5% 63V
2271	4822 122 33519	470pF 10% 50V
2272Δ	4822 126 12882	100nF 20% 50V
2273Δ	4822 126 12785	47nF TUB 50V
2274	4822 122 33519	470pF 10% 50V
2275	5322 121 42386	100nF 5% 63V
2276	5322 121 42386	100nF 5% 63V
2277	4822 121 41857	10nF 5% 250V
2278	4822 121 41857	10nF 5% 250V
2279	4822 121 41854	150nF 5% 63V
2280Δ	4822 124 40196	220µF 20% 16V
2281	4822 124 41751	47µF 20% 50V
2282	4822 124 80857	470µF 16V
2283	4822 124 41751	47µF 20% 50V
2284	4822 124 81151	22µF 50V
2285Δ	4822 124 40246	4,7µF 20% 63V
2286	4822 124 40255	100µF 20% 63V
2287Δ	4822 122 33191	22pF 5% 50V
2288Δ	4822 122 33191	22pF 5% 50V
2289	4822 121 41854	150nF 5% 63V
2290	4822 124 40242	1µF 20% 63V
2291	4822 121 51252	470nF 5% 63V
2292Δ	4822 122 33195	100pF 10% 50V
2293	4822 124 81151	22µF 50V
2295	4822 121 51252	470nF 5% 63V
2296Δ	4822 121 51387	10nF 20% 16V
2297Δ	4822 126 12339	2,2nF 10% Y5R
2298Δ	4822 126 12339	2,2nF 10% Y5R
2300Δ	4822 126 11585	22nF 20% 25V
2301Δ	4822 126 11585	22nF 20% 25V
2302Δ	4822 126 12882	100nF 20% 50V
2310Δ	4822 126 12785	47nF TUB 50V
2311Δ	4822 126 12785	47nF TUB 50V
2312Δ	4822 122 33195	100pF 10% 50V
2313Δ	4822 121 51387	10nF 20% 16V
2314	4822 124 80707	2200µF 20% 25V
2315	4822 124 40242	1µF 20% 63V

3260	4822 116 52269	3k3 5% 0,5W
3261	4822 116 52269	3k3 5% 0,5W
3263Δ	4822 052 10279	27Ω 5% 0,33W
3264	4822 116 83881	390Ω 5% 0,5W
3265	4822 116 52283	4k7 5% 0,5W
3269	4822 116 52269	3k3 5% 0,5W
3270	4822 116 83874	220k 5% 0,5W
3271	4822 116 52269	3k3 5% 0,5W
3272	4822 116 52272	330k 5% 0,5W
3273	4822 116 52269	3k3 5% 0,5W
3274	4822 116 52234	100k 5% 0,5W
3275	4822 116 52285	470k 5% 0,5W
3276	4822 116 52304	82k 5% 0,5W
3277	4822 116 52271	33k 5% 0,5W
3278	4822 116 52283	4k7 5% 0,5W
3279	4822 116 83864	10k 5% 0,5W
3280	4822 116 52272	330k 5% 0,5W
3281	4822 116 83884	47k 5% 0,5W
3282	4822 116 83884	47k 5% 0,5W
3283	4822 116 83884	47k 5% 0,5W
3284	4822 116 52283	4k7 5% 0,5W
3285	4822 116 83884	47k 5% 0,5W
3286	4822 050 11002	1k 1% 0,4W
3287	4822 050 11002	1k 1% 0,4W
3288	4822 116 83961	6k8 5%
3289	4822 116 52272	330k 5% 0,5W
3290	4822 116 52234	100k 5% 0,5W
3291	4822 116 52269	3k3 5% 0,5W
3292	4822 116 83884	47k 5% 0,5W
3293Δ	4822 052 10228	2Ω2 5% 0,33W
3294Δ	4822 052 10228	2Ω2 5% 0,33W
3295	4822 116 52219	330Ω 5% 0,5W
3296	4822 116 52283	4k7 5% 0,5W
3297	4822 116 83864	10k 5% 0,5W
3298	4822 116 83961	6k8 5%
3301	4822 116 83961	6k8 5%
3303	4822 116 83884	47k 5% 0,5W
3304	4822 116 83884	47k 5% 0,5W
3305	4822 116 83864	10k 5% 0,5W
3306Δ	4822 052 10109	10Ω 5% 0,33W
3307	4822 116 52257	22k 5% 0,5W
3308	4822 116 83864	10k 5% 0,5W
3311	4822 116 52269	3k3 5% 0,5W
3312	4822 116 83884	47k 5% 0,5W
3313	4822 116 83884	47k 5% 0,5W
3314	4822 116 83884	47k 5% 0,5W
3315	4822 116 83884	47k 5% 0,5W
3316	4822 116 83864	10k 5% 0,5W
3317	4822 116 52283	4k7 5% 0,5W
3318	4822 050 11002	1k 1% 0,4W
3319	4822 116 83883	470Ω 5% 0,5W
3320	4822 116 83864	10k 5% 0,5W
3321	4822 116 52263	2k7 5% 0,5W
3323	4822 116 83864	10k 5% 0,5W
3324	4822 116 83864	10k 5% 0,5W
3325	4822 116 83864	10k 5% 0,5W

5310	4822 280 10299	Relay 1P 9V 15A
5311Δ	4822 157 71285	400µH 30%
5312Δ	4822 146 10744	Mains transf. std-by
5313Δ	4822 146 10745	Mains transformer

6260Δ	5322 130 30684	1N4002RL
6264Δ	4822 130 82079	D3SBA20
6265Δ	4822 130 30621	1N4148
6266Δ	4822 130 30621	1N4148
6267Δ	5322 130 30684	1N4002RL
6268Δ	5322 130 30684	1N4002RL
6270Δ	4822 130 30621	1N4148
6271Δ	4822 130 30621	1N4148
6272Δ	4822 130 30621	1N4148
6273Δ	4822 130 30621	1N4148
6274Δ	4822 130 30621	1N4148
6275Δ	4822 130 30621	1N4148
6276Δ	4822 130 30621	1N4148
6277Δ	4822 130 30621	1N4148
6278Δ	4822 130 30621	1N4148
6310Δ	4822 130 30621	1N4148
6311Δ	4822 130 30621	1N4148
6312Δ	5322 130 30684	1N4002RL
6313Δ	5322 130 30684	1N4002RL
6314Δ	5322 130 30684	1N4002RL
6315Δ	5322 130 30684	1N4002RL
6360	4822 130 10791	LTL-1CHGE
6361	4822 130 10792	LTL-1CHPE

7260	4822 209 30941	NJM2068D
7262	4822 209 80797	LM393N
7265Δ	4822 130 44197	BC558B
7266Δ	4822 130 44197	BC558B
7267	4822 209 90411	AN7164
7268Δ	4822 130 40981	BC337-25
7269Δ	4822 130 42231	BC557C
7270	4822 130 40937	BC548B
7271	4822 130 40937	BC548B
7272Δ	4822 130 44503	BC547C
7273Δ	4822 130 42231	BC557C
7274Δ	4822 130 44503	BC547C
7275Δ	4822 209 33083	L7808CV
7310Δ	4822 130 44503	BC547C

Surround sound receiver [AE3]

Various

1002	4822 212 11719	864MHz receiver
1002	4822 212 11746	433MHz receiver
1710	4822 210 10822	864MHz frontend unit
1710	4822 218 11568	433MHz frontend unit
1765	4822 277 11671	Switch 7 positions

2101	4822 126 13692	47pF 1% 63V
2102Δ	5322 122 32654	22nF 10% 63V
2103	5322 122 33063	2,2pF 5% 50V
2104	4822 122 33575	220pF 5% 50V

2105Δ	5322 122 32654	22nF 10% 63V
2106	4822 126 14469	2,7pF 9% 50V
2107	5322 122 33537	1,2pF 5% 63V
2108	5322 122 32287	4,7pF 5% 50V
2109	4822 126 13296	100nF 10% 16V
2110	4822 126 13692	47pF 1% 63V
2111	5322 122 32658	22pF 5% 50V
2112	5322 122 32658	22pF 5% 50V
2113	5322 122 32658	22pF 5% 50V
2114	4822 126 13296	100nF 10% 16V
2115	4822 122 33175	2,2nF 20% 50V
2116Δ	5322 122 32654	22nF 10% 63V
2117	5322 122 32658	22pF 5% 50V
2118	5322 122 32658	22pF 5% 50V
2119	5322 122 32658	22pF 5% 50V
2120	4822 122 33575	220pF 5% 50V
2121	4822 126 13695	82pF 1% 63V
2122	4822 126 13695	82pF 1% 63V
2123	5322 122 31873	2,7pF +-0,5 100V
2706Δ	5322 122 32654	22nF 10% 63V
2710Δ	5322 122 32654	22nF 10% 63V
2712Δ	5322 122 32654	22nF 10% 63V
2714	4822 124 41576	2,2µF 20% 50V
2715	4822 124 41576	2,2µF 20% 50V
2716Δ	4822 124 40246	4,7µF 20% 63V
2718Δ	5322 122 32654	22nF 10% 63V
2720	4822 121 42729	1,5nF 1% 250V
2731Δ	4822 124 40246	4,7µF 20% 63V
2731	4822 124 41576	2,2µF 20% 50V
2732	4822 122 33797	47nF 20% 50V
2750	4822 126 13061	220nF 20% 25V
2751	5322 122 32531	100pF 5% 50V
2752	4822 126 13061	220nF 20% 25V
2753Δ	5322 122 32654	22nF 10% 63V
2754Δ	4822 124 40246	4,7µF 20% 63V
2755Δ	5322 122 32654	22nF 10% 63V
2760	4822 124 81151	22µF 50V
2761	4822 126 13692	47pF 1% 63V
2770Δ	4822 124 40433	47µF 20% 25V
2771Δ	5322 122 32654	22nF 10% 63V
2772	4822 124 41576	2,2µF 20% 50V
2773	4822 124 41576	2,2µF 20% 50V
2774	4822 121 51252	470nF 5% 63V
2774	4822 121 51319	1µF 10% 63V
2779Δ	5322 122 32654	22nF 10% 63V
2780Δ	4822 124 41579	10µF 20% 50V
2781Δ	4822 124 40246	4,7µF 20% 63V
2782Δ	5322 126 10223	4,7nF 10% 63V
2783	4822 124 41576	2,2µF 20% 50V
2790Δ	4822 124 40246	4,7µF 20% 63V
2791	4822 126 13061	220nF 20% 25V
2792	4822 122 33575	220pF 5% 50V
2794	4822 122 33575	220pF 5% 50V

3103	4822 117 11503	220Ω 1% 0.1W
3104Δ	4822 051 20471	470Ω 5% 0,1W
3105	4822 051 20562	5k6 5% 0,1W 0805
3106	4822 117 10834	47k 1% 0,1W
3107	4822 051 20273	27k 5% 0,1W
3108	4822 051 20479	47Ω 5% 0,1W
3109Δ	4822 051 20471	470Ω 5% 0,1W
3110Δ	4822 051 20471	470Ω 5% 0,1W
3111Δ	4822 051 20471	470Ω 5% 0,1W
3112	4822 117 10833	10k 1% 0,1W
3701Δ	4822 051 20471	470Ω 5% 0,1W
3702Δ	4822 051 20471	470Ω 5% 0,1W
3703	4822 117 11449	2k2 1% 0,1W
3704Δ	4822 051 20471	470Ω 5% 0,1W
3705Δ	4822 051 20101	100Ω 5% 0,1W
3706	4822 117 12955	2k7 1% 0,1W 0805
3707	4822 051 20331	330Ω 5% 0,1W
3708	4822 051 20478	4Ω7 5% 0,1W
3709	4822 117 11448	180Ω 1% 0,1W
3710Δ	4822 051 20471	470Ω 5% 0,1W
3711	4822 051 10008	0Ω 5% 0,25W
3712Δ	4822 051 20472	4k7 5% 0,1W
3716Δ	4822 051 20332	3k3 5% 0,1W
3717	4822 117 11449	2k2 1% 0,1W
3719Δ	4822 051 20332	3k3 5% 0,1W
3720Δ	4822 051 20153	15k 5% 0,1W
3721Δ	4822 100 20166	10k 30%LIN 0,1W
3730Δ	4822 051 20101	100Ω 5% 0,1W
3731	4822 117 11383	12k 1% 0,1W
3732Δ	4822 051 20153	15k 5% 0,1W
3733Δ	4822 051 20332	3k3 5% 0,1W
3734	4822 051 20561	560Ω 5% 0,1W
3735Δ	4822 051 20121	120Ω 5% 0,1W
3736Δ	4822 051 20008	0Ω jumper . (0805)
3750	4822 117 11448	180Ω 1% 0,1W
3753	4822 117 10833	10k 1% 0,1W
3754	4822 051 20104	100k 5% 0,1W
3755	4822 117 10833	10k 1% 0,1W
3756	4822 117 10833	10k 1% 0,1W
3757	4822 117 10833	10k 1% 0,1W
3765	4822 051 10008	0Ω 5% 0,25W
3767	4822 051 10008	0Ω 5% 0,25W
3770	4822 116 83872	220Ω 5% 0,5W
3771	4822 117 10833	10k 1% 0,1W
3772Δ	4822 051 20332	3k3 5% 0,1W
3779	4822 051 10102	1k 2% 0,25W
3780	4822 051 20104	100k 5% 0,1W
3781	4822 117 10965	18k 1% 0,1W
3782	4822 117 10834	47k 1% 0,1W
3783	4822 117 11449	2k2 1% 0,1W
3784	4822 117 11449	2k2 1% 0,1W
3785	4822 117 11449	2k2 1% 0,1W
3790	4822 117 11449	2k2 1% 0,1W
3791	4822 051 10008	0Ω 5% 0,25W
3793	4822 051 20104	100k 5% 0,1W
3794	4822 051 10008	0Ω 5% 0,25W
4xxx	4822 051 10008	0Ω 5% 0,25W (1206)
4xxx	4822 051 20008	0Ω 5% 0,25W (0805)

5101	4822 157 11665	4,7nH
5102	4822 157 11666	6.8µH
5104	4822 157 11667	FM IF COIL
5106	4822 242 10924	864 mH z
5705	4822 157 11172	68nH
5705Δ	4822 157 71206	BLM21A601SPT
5706	4822 242 70665	SFE10,7MS3-A
5707	4822 242 70665	SFE10,7MS3-A
5710	4822 157 63904	Q DETECTION COIL
5730	4822 157 11219	µH LTIPLEX TER COIL
5730	4822 157 11668	MPX TER COIL 20KHZ
5750	4822 242 72527	CST4,00mH z W-TF01

6101	4822 130 83614	BB135
6710Δ	5322 130 34331	BAV70
6751Δ	4822 130 30621	1N4148
6752Δ	5322 130 31928	BAS16
6770	4822 130 34382	BZX79-B8V2

7101	4822 209 16663	SA621DK
7707Δ	4822 130 42353	BSF19-F2
7710	4822 209 60658	LA1805
7735	4822 130 60511	BC847B
7735Δ	5322 130 41982	BC848B
7750	4822 209 15264	MC68HC05J1 ADW.
7750	4822 209 16664	MC68HC05J1/ADW
7755	4822 130 60511	BC847B
7755Δ	5322 130 41982	BC848B
7770	4822 209 31136	SA572N
7780	4822 209 83274	NJM4560D
7784	4822 130 60511	BC847B
7784Δ	5322 130 41982	BC848B
7789	4822 130 60511	BC847B
7789Δ	5322 130 41982	BC848B
7790	4822 209 15263	L78L06ACZ

VGA interface [AF]

Various

	4822 267 10915	2P male v
	4822 265 10787	11P ED 1,25 grey
	4822 265 10788	11P ED 1,25 black
	4822 265 31248	3P ED 1,25 grey
1061	4822 212 11749	VGA interface MD2.25 28"

2110	4822 126 13869	470nF 20% 16V
2114Δ	4822 124 40433	47µF 20% 25V
2120	4822 126 13869	470nF 20% 16V
2130	4822 126 13869	470nF 20% 16V
2140	4822 124 41584	100µF 20% 10V
2141	4822 122 33797	47nF 20% 50V
2142	4822 124 40242	1µF 20% 63V
2144	4822 122 33216	270pF 5% 50V
2145	4822 122 32646	5,6nF 10% 50V
2147	5322 122 32531	100pF 5% 50V
2150Δ	4822 126 10002	100nF 20% 25V
2160Δ	4822 126 10002	100nF 20% 25V
2163Δ	5322 122 34123	1nF 10% 50V
2164	4822 122 33797	47nF 20% 50V
2165Δ	4822 126 10002	100nF 20% 25V
2166Δ	4822 126 10002	100nF 20% 25V
2170	4822 126 13869	470nF 20% 16V
2175Δ	4822 126 10002	100nF 20% 25V
2176Δ	4822 126 10002	100nF 20% 25V
2180Δ	4822 126 10002	100nF 20% 25V
2211Δ	4822 126 10002	100nF 20% 25V

3101Δ	4822 051 20101	100Ω 5% 0,1W
3103Δ	4822 051 20101	100Ω 5% 0,1W
3107Δ	4822 051 20101	100Ω 5% 0,1W
3109Δ	4822 052 10108	1Ω 5% 0,33W
3110Δ	4822 051 20101	100Ω 5% 0,1W
3111	4822 117 10834	47k 1% 0,1W
3112	4822 117 10834	47k 1% 0,1W
3114	4822 117 11503	220Ω 1% 0.1W
3120Δ	4822 051 20101	100Ω 5% 0,1W
3121	4822 117 10834	47k 1% 0,1W
3122	4822 117 10834	47k 1% 0,1W
3124	4822 117 11503	220Ω 1% 0.1W
3130Δ	4822 051 20101	100Ω 5% 0,1W
3131	4822 117 10834	47k 1% 0,1W
3132	4822 117 10834	47k 1% 0,1W
3134	4822 117 11503	220Ω 1% 0.1W
3140	4822 116 52175	100Ω 5% 0,5W
3141	4822 051 20224	220k 5% 0,1W
3142	4822 051 20273	27k 5% 0,1W
3143	4822 051 20474	470k 5% 0,1W
3144	4822 051 10102	1k 2% 0,25W
3145	4822 117 10833	10k 1% 0,1W
3146	4822 117 10833	10k 1% 0,1W
3147	4822 051 10102	1k 2% 0,25W
3150Δ	4822 052 10108	1Ω 5% 0,33W
3151	4822 116 52175	100Ω 5% 0,5W
3152	4822 116 52175	100Ω 5% 0,5W
3155Δ	4822 051 20101	100Ω 5% 0,1W
3157Δ	4822 051 20101	100Ω 5% 0,1W
3160Δ	4822 051 20101	100Ω 5% 0,1W
3161	4822 117 11383	12k 1% 0,1W
3162	4822 101 11191	10k 30%LIN 0.1W
3163	4822 051 20223	22k 5% 0,1W
3164	4822 051 20154	150k 5% 0,1W
3165	4822 051 20104	100k 5% 0,1W
3166	4822 051 20564	560k 5% 0,1W
3167Δ	4822 051 20472	4k7 5% 0,1W
3168	4822 116 52175	100Ω 5% 0,5W
3170	4822 051 20224	220k 5% 0,1W
3171	4822 051 20564	560k 5% 0,1W
3172Δ	4822 051 20472	4k7 5% 0,1W
3175Δ	4822 051 20471	470Ω 5% 0,1W
3176Δ	4822 051 20471	470Ω 5% 0,1W
3177	4822 051 20474	470k 5% 0,1W
3178	4822 051 20474	470k 5% 0,1W
3180Δ	4822 052 10108	1Ω 5% 0,33W
3181Δ	4822 051 20471	470Ω 5% 0,1W
3182Δ	4822 051 20471	470Ω 5% 0,1W
3189	4822 117 11449	2k2 1% 0,1W
3999Δ	4822 051 20101	100Ω 5% 0,1W

5100	4822 157 50964	100µH 10%

6110	4822 130 81513	BZV55-C6V8
6120	4822 130 81513	BZV55-C6V8
6130	4822 130 81513	BZV55-C6V8
6140	4822 130 80446	BAS32L
6151	4822 130 81513	BZV55-C6V8
6152	4822 130 81513	BZV55-C6V8
6175	4822 130 80446	BAS32L
6176	4822 130 80446	BAS32L
6181	4822 130 81513	BZV55-C6V8
6182	4822 130 81513	BZV55-C6V8

7111	5322 130 42136	BC848C
7121	5322 130 42136	BC848C
7131	5322 130 42136	BC848C
7140	5322 209 73332	PC74HCT4046AP
7150	5322 209 12616	PC74HCT126P
7160	4822 209 71585	74HCT4538N
7165	5322 130 42136	BC848C
7170	5322 209 11473	74HCT86N
7171	5322 130 42136	BC848C
7180	4822 209 63896	PCF8574AP

Mains switch panel FL5+ [AH]

Various

	4822 256 92284	Led holder
	4822 267 10913	2P male h
Δ	4822 265 41462	7P ED 1,25 white
Δ	4822 276 13592	Mains switch
1600	4822 212 30842	IR receiver
1001	4822 212 11479	Mains switch panel FL5+ MD2.25

2601	4822 124 41643	100µF 20% 16V
2604Δ	4822 124 40196	220µF 20% 16V

3522	4822 116 10065	1M A/495V MAX 850V
3523Δ	4822 053 21475	4M7 5% 0,5W
3600	4822 116 52175	100Ω 5% 0,5W
3601	4822 116 52175	100Ω 5% 0,5W
3602	4822 116 52213	180Ω 5% 0,5W
3604	4822 116 52175	100Ω 5% 0,5W
3605	4822 116 52175	100Ω 5% 0,5W
3611	4822 116 52175	100Ω 5% 0,5W
3613Δ	4822 052 10109	10Ω 5% 0,33W

6600	4822 130 34174	BZX79-B4V7
6610	4822 130 83414	TLHR4405
6611	4822 130 80313	TLHG4400

7610	5322 130 44647	BC368

AV-in/out + control panel FL5+ [AG]

Various

	4822 276 13591	Switch
	4822 256 10342	Switch holder
	4822 265 41463	Socket headph.+cinch+SVHS
	4822 265 41451	9P ED 1,25 black
	4822 265 31245	4P ED 2,5
	4822 265 10423	3P male v
1002	4822 212 11481	Front I/O panel FL5+ MD2.25

2800	4822 124 81151	22µF 50V
2801	4822 124 81151	22µF 50V
2804	5322 122 31863	330pF 5% 50V
2805	5322 122 31863	330pF 5% 50V
2810	4822 126 12105	33nF 5% 63V
2811	4822 124 41643	100µF 20% 16V
2813	4822 124 41576	2,2µF 20% 50V
2815	4822 126 13561	220nF 10% 16V
2816Δ	4822 126 10002	100nF 20% 25V
2817	4822 124 81151	22µF 50V
2832Δ	4822 122 33177	10nF 20% 50V
2834Δ	4822 122 33177	10nF 20% 50V

3630	4822 116 52257	22k 5% 0,5W
3631	4822 116 52269	3k3 5% 0,5W
3632	4822 116 52289	5k6 5% 0,5W
3634	4822 116 52175	100Ω 5% 0,5W
3801	4822 116 52201	75Ω 5% 0,5W
3802	4822 116 52201	75Ω 5% 0,5W
3803	4822 050 11002	1k 1% 0,4W
3804	4822 050 11002	1k 1% 0,4W
3805	4822 116 52257	22k 5% 0,5W
3806	4822 116 52257	22k 5% 0,5W
3807	4822 116 52176	10Ω 5% 0,5W
3808Δ	4822 051 20008	0Ω jumper . (0805)
3810	4822 051 20824	820k 5% 0,1W
3811	4822 051 20393	39k 5% 0,1W
3813	4822 117 11449	2k2 1% 0,1W
3814	4822 051 20392	3k9 5% 0,1W
3815	4822 051 10102	1k 2% 0,25W
3816	4822 051 10102	1k 2% 0,25W
3817	4822 051 20474	470k 5% 0,1W
3818	4822 051 10102	1k 2% 0,25W
3819	4822 116 83872	220Ω 5% 0,5W
3820	4822 116 52243	1k5 5% 0,5W
3830	4822 116 80173	10k 5% 0,5W
3842	4822 116 80173	10k 5% 0,5W
3998	4822 116 52175	100Ω 5% 0,5W
3998	4822 116 83872	220Ω 5% 0,5W
3999Δ	4822 051 20101	100Ω 5% 0,1W

6801	4822 130 81513	BZV55-C6V8
6802	4822 130 81513	BZV55-C6V8
6803	4822 130 82346	BZV55-C27
6804	4822 130 82346	BZV55-C27
6805	4822 130 82346	BZV55-C27
6806	4822 130 82346	BZV55-C27
6807	4822 130 81513	BZV55-C6V8
6808	4822 130 81513	BZV55-C6V8

7811	5322 130 60508	BC857B
7812	5322 130 60508	BC857B
7815Δ	5322 130 41982	BC848B
7816	5322 130 60508	BC857B

VGA input panel [AF]

Various

	4822 276 13591	Switch
	4822 256 10342	Switch holder
	4822 265 41463	Socket headph.+cinch +SVHS
	4822 265 41451	9P ED 1,25 black
	4822 267 10753	4P B04B-EHP4
	4822 265 10423	3P male v
	4822 265 10787	11P ED 1,25 grey
	4822 267 51477	15P female h
1049	4822 212 11748	VGA input panel MD2.25

2800	4822 124 81151	22µF 50V
2801	4822 124 81151	22µF 50V
2804	4822 122 33805	330pF 10% 63V
2805	4822 122 33805	330pF 10% 63V
2810	4822 126 12105	33nF 5% 63V
2811	4822 124 41643	100µF 20% 16V DIM:6,3X11MM
2813	4822 124 41576	2,2µF 20% 50V
2815	4822 126 13561	220nF 10% 16V
2816Δ	4822 126 10002	100nF 20% 25V
2817	4822 124 81151	22µF 50V
2832Δ	4822 122 33177	10nF 20% 50V
2834Δ	4822 122 33177	10nF 20% 50V
2837	4822 126 13692	47pF 1% 63V
2838	4822 126 13692	47pF 1% 63V

3801	4822 116 52201	75Ω 5% 0,5W
3802	4822 116 52201	75Ω 5% 0,5W
3803	4822 050 11002	1k 1% 0,4W
3804	4822 050 11002	1k 1% 0,4W
3805	4822 116 52257	22k 5% 0,5W
3806	4822 116 52257	22k 5% 0,5W
3807	4822 116 52176	10Ω 5% 0,5W
3808Δ	4822 051 20008	0Ω jumper . (0805)
3810	4822 051 20824	820k 5% 0,1W
3811	4822 051 20393	39k 5% 0,1W
3813	4822 117 11449	2k2 1% 0,1W
3814	4822 051 20392	3k9 5% 0,1W
3815	4822 051 10102	1k 2% 0,25W
3816	4822 051 10102	1k 2% 0,25W
3817	4822 051 20474	470k 5% 0,1W
3818	4822 051 10102	1k 2% 0,25W
3819	4822 116 83872	220Ω 5% 0,5W
3820	4822 116 52243	1k5 5% 0,5W
3821	4822 116 52201	75Ω 5% 0,5W
3822	4822 116 52201	75Ω 5% 0,5W
3823	4822 116 52201	75Ω 5% 0,5W
3824	4822 050 11002	1k 1% 0,4W
3825	4822 050 11002	1k 1% 0,4W
3830	4822 116 80173	10k 5% 0,5W
3832	4822 116 52257	22k 5% 0,5W
3833	4822 116 52269	3k3 5% 0,5W
3834	4822 116 52289	5k6 5% 0,5W
3836	4822 116 52175	100Ω 5% 0,5W
3837Δ	4822 051 20101	100Ω 5% 0,1W
3838Δ	4822 051 20101	100Ω 5% 0,1W
3842	4822 116 80173	10k 5% 0,5W
3999Δ	4822 051 20101	100Ω 5% 0,1W

6801	4822 130 81513	BZV55-C6V8
6802	4822 130 81513	BZV55-C6V8
6803	4822 130 82346	BZV55-C27
6804	4822 130 82346	BZV55-C27
6805	4822 130 82346	BZV55-C27
6806	4822 130 82346	BZV55-C27
6807	4822 130 81513	BZV55-C6V8
6808	4822 130 81513	BZV55-C6V8
6810	4822 130 81513	BZV55-C6V8
6811	4822 130 81513	BZV55-C6V8
6812	4822 130 81513	BZV55-C6V8
6813	4822 130 81513	BZV55-C6V8
6814	4822 130 81513	BZV55-C6V8
6815	4822 130 81513	BZV55-C6V8
6816	4822 130 81513	BZV55-C6V8
6817	4822 130 81513	BZV55-C6V8
6818	4822 130 81513	BZV55-C6V8
6819	4822 130 81513	BZV55-C6V8

7811	5322 130 60508	BC857B
7812	5322 130 60508	BC857B
7815Δ	5322 130 41982	BC848B
7816	5322 130 60508	BC857B

Service Service Service

MD 2.21 E 2.22 E 2.23 E AA

Service Manual

Table of contents

		Page	
1. Technical specifications		2	
2. Connection facilities		2	
Chassis overview		3	
3. Safety instructions, Maintenance instructions, Warnings and Notes		3	
4. Mechanical instructions		4	
5. Block diagram non-Top-Dolby version		5	
Block diagram Top-Dolby version (front control styling)		6	
Survey of testpoints		7	
6. Service modes, DST, Error messages, Protections, Faultfinding and Repair tips		8	
Block diagram supply voltages and I²C-tree		12	
7. *Electrical diagrams and print lay-outs*		*Diagram*	*PWB*
Large Signal Panel	(Diagram A)	App.	14
Small Signal Panel	(Diagram K)	App.	13
Overview oscillograms		15	
Mains filter panel	(Diagram B)	16	16
+5V Supply panel 1.6A	(Diagram C)	16	16
+5V Supply panel 2.1/2.5A	(Diagram C)	16	16
DDP (geometry) panel	(Diagram D)	App.	16
Picture tube + SCAVEM panel	(Diagram E)	17	17
North/South + Frame rotation + S-correction panel	(Diagram F2)	18	18
External DC shift panel	(Diagram G2)	18	18
Surround sound panel	(Diagram H1)	18	18
Clickfit panel	(Diagram H2)	19	19
DBE (Dynamic Bass Enhancement) panel	(Diagram I)	19	19
TXT + Control panel	(Diagram J)	20	20
IF module	(Diagram L)	23	23
Feature Box (Digital Scan) panel	(Diagram M1)	24	25
Block diagrams of IC's in Feature Boxes		26	
Feature Box (natural motion) panel	(Diagram M2)	29	28
AI (Artificial Intelligence) panel	(Diagram N)	30	30
PALplus panel	(Diagram N2)	31	31
Audio module (no dolby)	(Diagram O)	32	34
Electrical diagrams and print lay-outs		*Diagram*	*PWB*
Dolby Audio module (with VDS audio processing)	(Diagram P2)	33	34
COMB filter module	(Diagram Q)	34	34
PIP interface panel	(Diagram R)	36	36
PIP2 module	(Diagram S)	35	35
Mains input + RC5 panel (top control middle styling)	(Diagram T)	36	36
Mains input + RC5 panel (top control right styling)	(Diagram U)	36	36
Front input/output panel (top control styling)	(Diagram V)	37	37
Top control panel (top control middle styling)	(Diagram W)	37	37
Top control panel (top control right styling)	(Diagram X)	37	37
Mains input panel (classis line styling)	(Diagram Y)	37	37
Control board (classic line styling)	(Diagram Z)	37	37
Audio amplifier panel	(Diagram AA)	38	38
Audio supply panel	(Diagram AB)	39	39
Video DualScreen panel	(Diagram AC)	40	40
YUV-interface panel	(Diagram AD)	43	43
Wireless Dolby	(Diagram AE)	44	44
VGA-interface panel	(Diagram AF)	47	48
Mains input + RC5 panel (front control styling)	(Diagram AH)	49	49
Front input/output panel (front control styling)	(Diagram AG)	49	49
Front input/output panel with VGA input (front control styling)	(Diagram AG2)	49	49
8. Electrical adjustments		50	
9. Circuit description		52	
10. Directions for use		60	
11. List of abbreviations		65	
12. Spare parts list		67	

Published by MM 9762 TV Service Department Printed in The Netherlands ©Copyright reserved Subject to modification GB 4822 727 21484

PCS 91 143 GB

1. Technical specifications

Mains voltage	: 220 - 240 V (± 10%)
	: 50 Hz - 60 Hz (± 5%)
Aerial input impedance	: 75 Ω - koaxial
Minimum aerial voltage	: 30 µV (VHF), 40 µV (UHF)
Maximum aerial voltage VHF/S/UHF	: 180 mV
Programmes	: 0 - 99
VCR programmes	: 0, 50 - 99

2. Connection facilities

TOP CONTROL STYLING MIDDLE (FL6A)

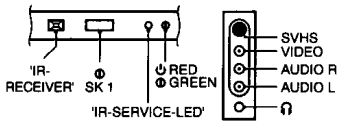

TOP CONTROL STYLING RIGHT (FL6B)

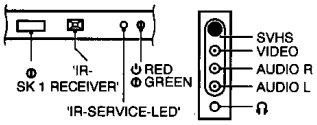

TOP CONTROL STYLING (FL5)

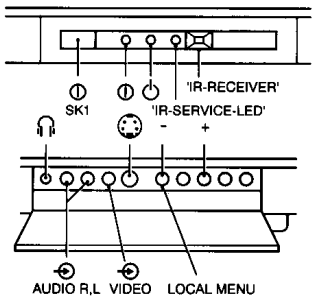

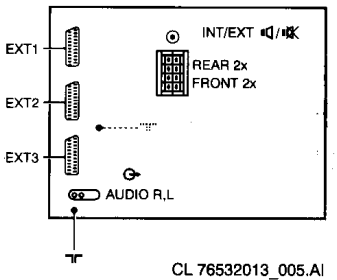

CL 76532013_005.AI
200297

Specification of the connectors

EXT 1 (AUX): RGB+CVBS

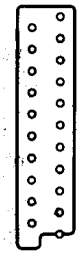

1 - Audio R (0.5V_{RMS} ≤ 1kΩ)
2 - Audio R (0.5V_{RMS} ≥ 10kΩ)
3 - Audio L (0.5V_{RMS} ≤ 1kΩ)
4 - Audio ⊥
5 - Blue ⊥
6 - Audio L (0.5V_{RMS} ≥ 10kΩ)
7 - Blue (0.7V_{pp}/75Ω)
8 - CVBS-status
0-1.3V: INT
4.5-7V: EXT 16:9
9.5-12V: EXT 4:3
9 - Green ⊥
10 - -
11 - Green (0.7V_{pp}/75Ω)
12 - -
13 - Red ⊥
14 - RGB-status ⊥
15 - Red (0.7V_{pp}/75Ω)
16 - RGB-status
(0-0.4V: INT)
(1-3V: EXT/75Ω)
17 - CVBS ⊥
18 - CVBS ⊥
19 - CVBS (1V_{pp}/75Ω)
20 - CVBS (1V_{pp}/75Ω)
21 - Earthscreen

EXT2 (VCR): SVHS+CVBS+RGB

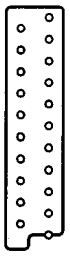

1 - Audio R (0.5V_{RMS} ≤ 1kΩ)
2 - Audio R (0.5V_{RMS} ≥ 10kΩ)
3 - Audio L (0.5V_{RMS} ≤ 1kΩ)
4 - Audio ⊥
5 - Blue ⊥
6 - Audio L (0.5V_{RMS} ≥ 10kΩ)
7 - Blue (0.7V_{pp}/75Ω)/C-out (project 50)
8 - CVBS-status
0-1.3V: int
4.5-7V: EXT 16:9
9.5-12V: EXT 4:3
9 - Green ⊥
10 - Control (project 50)
11 - Green (0.7V_{pp}/75Ω)
12 - -
13 - Red ⊥
14 - RGB-status ⊥
15 - Red (0.7V_{pp}/75Ω), C-in/out
16 - RGB-status
(0-0.4V: INT)
(1-3V: EXT/75Ω)
17 - CVBS ⊥
18 - CVBS ⊥
19 - CVBS/Y (1V_{pp}/75Ω)
20 - CVBS/Y (1V_{pp}/75Ω)
21 - Earthscreen

EXT3: CVBS+audio

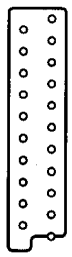

1 - -
2 - Audio R (0.5V_{RMS} ≥ 10kΩ)
3 - -
4 - Audio ⊥
5 - -
6 - Audio L (0.5V_{RMS} ≥ 10kΩ)
7 - -
8 - -
9 - -
10 - -
11 - -
12 - -
13 - -
14 - -
15 - -
16 - -
17 - CVBS ⊥
18 - CVBS ⊥
19 - -
20 - CVBS (1V_{pp}/75Ω)
21 - Earthscreen

Front

CINCH Video 1V_{pp}/75Ω
CINCH Audio L (2V_{RMS}; ≥ 10kΩ)
CINCH Audio R (2V_{RMS}; ≥ 10kΩ)

3.5mm 32-2000Ω ≥ 10mW

SVHS

1 - ⊥
2 - ⊥
3 - Y (1V_{pp}; 75Ω)
4 - C (0.3V_{pp}; 75Ω)

Audio out (rear)

CINCH Audio L (0.5V_{RMS}; ≤ 1kΩ)
CINCH Audio R (0.5V_{RMS}; ≤ 1kΩ)

Chassis overview

Non Top Dolby version

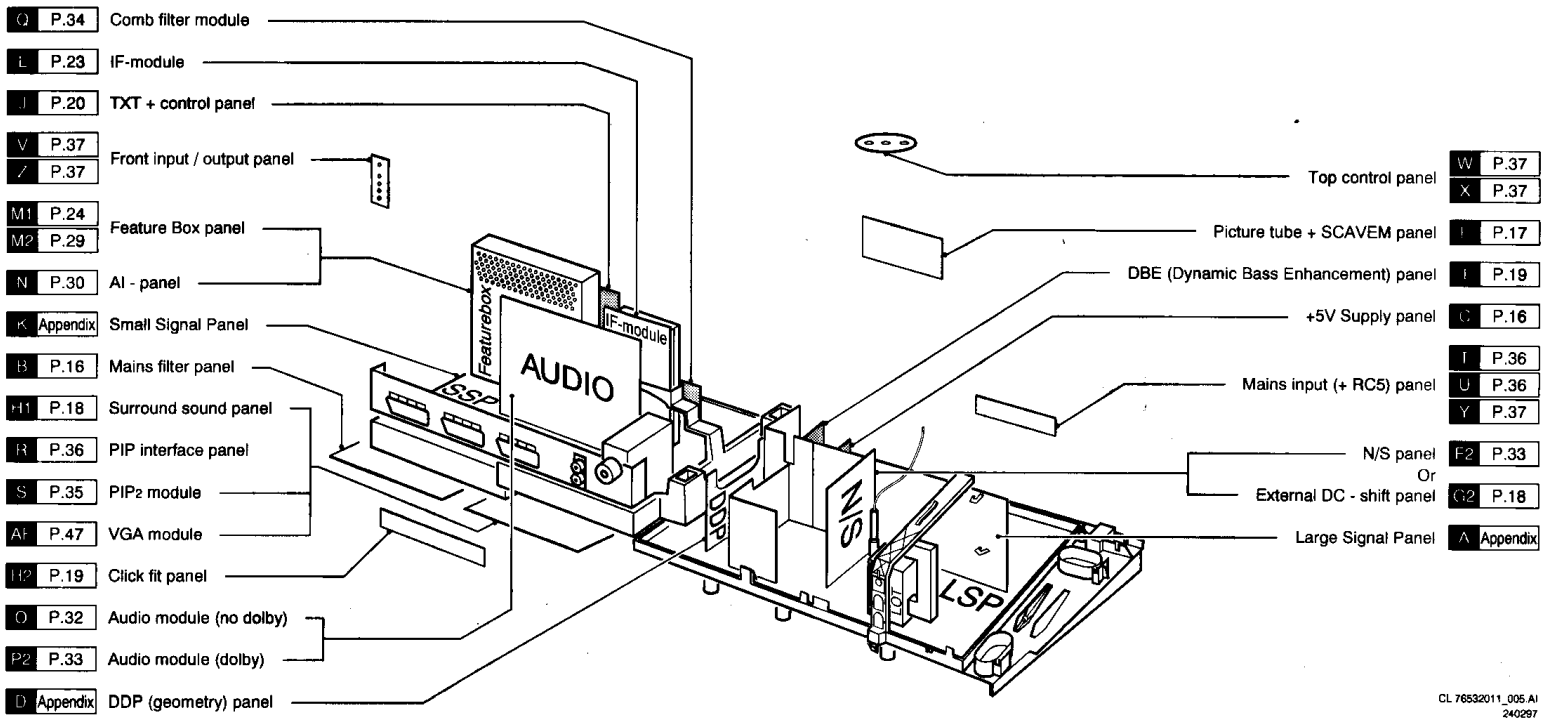

Top Dolby version

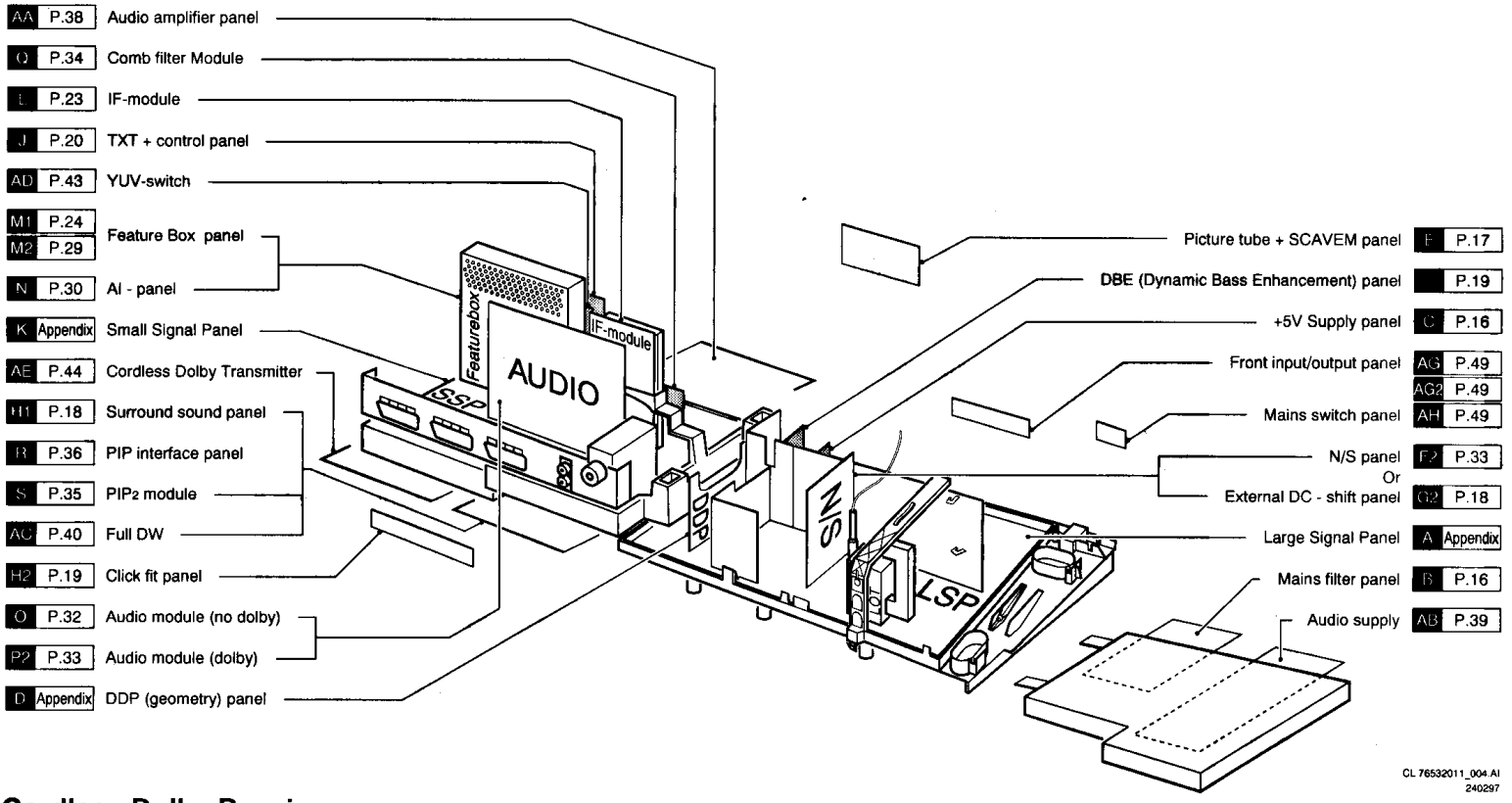

Cordless Dolby Receiver

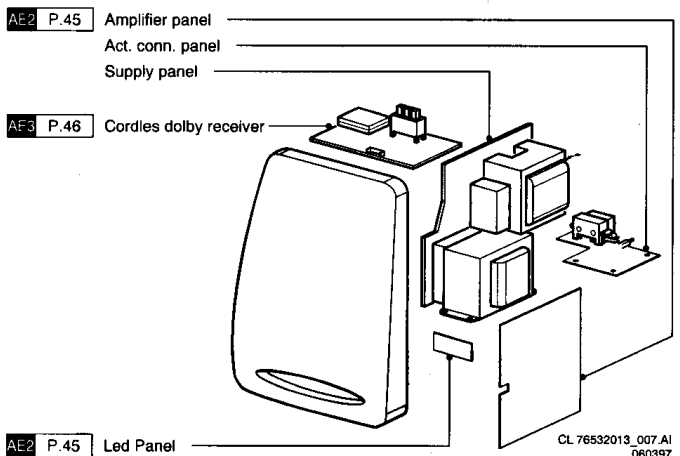

3. Safety instructions, Maintenance instructions,

Safety instructions for repairs

1. Safety regulations require that during a repair:
- the set should be connected to the mains via an isolating transformer
- safety components, indicated by the symbol ▲ should be replaced by components identical to the original ones
- when replacing the CRT, safety goggles must be worn

2. Safety regulations require that after a repair the set must be returned in its original condition. In particular attention should be paid to the following points:
- As a strict precaution, we advise you to resolder the solder joints through which the horizontal deflection current is flowing, in particular:
  - ★ all pins of the line output transformer (LOT);
  - ★ fly-back capacitor(s);
  - ★ S-correction capacitor(s);
  - ★ line output transistor;
  - ★ pins of the connector with wires to the deflection coil;
  - ★ other components through which the deflection current flows.

Note:
This resoldering is advised to prevent bad connections due to metal fatigue in solder joints and is therefore only necessary for television sets older than 2 years.
- The wire trees and EHT cable should be routed correctly and fixed with the mounted cable clamps.
- The insulation of the mains lead should be checked for external damage.
- The mains lead strain relief should be checked for its function in order to avoid touching the CRT, hot components or heat sinks.
- The electrical DC resistance between the mains plug and the secondary side should be checked (only for sets which have a mains isolated power supply). This check can be done as follows:
  - ★ unplug the mains cord and connect a wire between the two pins of the mains plug;
  - ★ set the mains switch to the on position (keep the mains cord unplugged!);
  - ★ measure the resistance value between the pins of the mains plug and the metal shielding of the tuner or the aerial connection on the set. The reading should be between 4.5 MΩ and 12 MΩ;
  - ★ switch off the TV and remove the wire between the two pins of the mains plug.
- The cabinet should be checked for defects to avoid touching of any inner parts by the customer.

Maintenance instruction

It is recommended to have a maintenance inspection carried out by a qualified service employee. The interval depends on the usage conditions:
- ★ when the set is used under normal circumstances, for example in a living room, the recommended interval is 3 to 5 years;
- ★ when the set is used in circumstances with higher dust, grease or moisture levels, for example in a kitchen, the recommended interval is 1 year.

The maintenance inspection contains the following actions:
- ★ execute the above mentioned 'general repair instruction';
- ★ clean the power supply and deflection circuitry on the chassis;
- ★ clean the picture tube panel and the neck of the picture tube.

Warnings

1. In order to prevent damage to ICs and transistors, all high-voltage flashovers must be avoided. In order to prevent damage to the picture tube, the method shown in Fig. 3.1 should be used to discharge the picture tube. Use a high-voltage probe and a multimeter (position DC-V). Discharge until the meter reading is 0V (after approx. 30s).

2. **ESD** ⚠

All ICs and many other semiconductors are sensitive to electrostatic discharges (ESD). Careless handling during repair can drastically shorten the life. Make sure that during repair you are connected by a pulse band with resistance to the same potential as the earth ot the unit. Keep components and tools also at this same potential.

3. Together with the deflection unit and any multipole unit, the flat square picture tubes used form an integrated unit. The deflection and the multipole units are set optimally at the factory. Adjustment of this unit during repair is therefore not recommended.

4. Be careful when taking measurements in the high-voltage section and on the picture tube.

5. Never replace modules or other components while the unit is switched on.

6. When making settings, use plastic rather than metal tools. This will prevent any short circuits and the danger of a circuit becoming unstable.

7. On this unit the 141 volt supply voltage is not supplied via an interconnection on the deflection yoke to the line output transformer. Whenthe deflection cable is detached, the + 141 volt supply remeins loaded. In orderto unload the + 141 volts, coil 5136 should be removed.

Warnings and Notes

Notes

1. The direct voltages and oscillograms should be measured with regard to the tuner earth (⊥), or hot earth (⏚) as this is called.

2. The direct voltages and oscillograms shown in the diagrams should be measured in the **Service Default Mode** (see chapter 6) with a colour bar signal and stereo sound (L: 3 kHz, R: 1 kHz unless stated otherwise) and picture carrier at 475.25 MHz.

3. Where necessary, the oscillograms and direct voltages are measured with (⊤) and without aerial signal (⊠). Voltages in the power supply section are measured both for normal operation (ⓘ) and in standby (⏻). These values are indicated by means of the appropriate symbols.

4. The picture tube PWB has printed spark gaps. Each spark gap is connected between an electrode of the picture tube and the Aquadag coating.

5. The semiconductors indicated in the circuit diagram and in the parts lists are completely interchangeable per position with the semiconductors in the unit, irrespective of the type indication on these semiconductors.

6. DOLBY SURROUND
   PRO • LOGIC

   Manufactured under license from Dolby Laboratories Licensing Corporation.
   DOLBY, the double-D symbol and PRO LOGIC are trademarks of Dolby Laboratories Licensing Corporation.

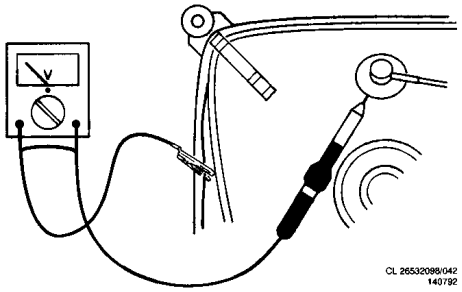

Fig. 3.1

4. Mechanical instructions

The MD2 chassis has predefined service positions for different panels. To get access to the chassis, first do the following steps:

1. Unscrew the 4 screws fixing the rear cover to the rear cover plate (cover plate with the scart plugs).
2. Unclick the 4 clicks at the top side and upper left and right side by pushing (no torquing is required) the clicks while pushing the rear cover a little.
3. Unscrew the remaining 4 screws.
4. Take of the rear cover.

Service position LSP component side

1. Remove the subwoofer by disconnecting the cable and lift it.
2. Put the SSP in the horizontal service position (see horizontal service position SSP) or the 30 degree position.
3. Remove the screw (1) in the bracket of the LOT. Remove this bracket by pushing the click (2) en pull it upwards.
4. Release clicks (3) and (4).
5. Lift the LSP PWB out of its bracket and pull it a little back.

   PS: After taking out the mains cord from its fixation clicks, the entire bottom plate with the chassis in it can be released from the cabinet and then shifted back to create more space.

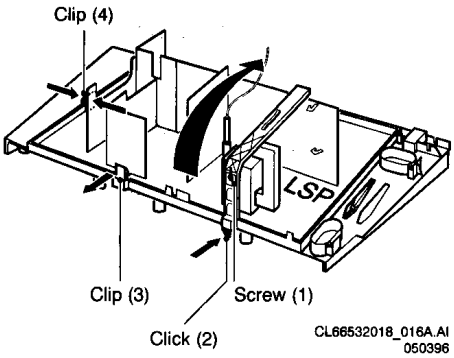

Fig. 4.1

Service position LSP copper side

Two possibilities:

With a table:

1. Bring the LSP in the service position component side (see above).
2. Take all wiring out of the fixation brackets (on the rear side of the chassis and under the picture tube).
3. Dismount the mains input panel from the SSP bracket and lay it on the table (this gives more freedom of the mains cable N01-L01).
4. Disconnect the degaussing coil (connector L02).
5. Disconnect the rotation coil (connector Y90) if fitted.
6. Carefully pull back the LSP and put it on its front side.

Without a table by making use of cable extension kit 4822 310 10674:

1. Disconnect all cables at the LSP side.
2. By now the LSP can be turned to a vertical position (5), copper side at the right hand with the LOT above. For this vertical position special slides are made in the bottom plate of the cabinet.
3. The LSP can be fixed to the bottom plate by using the special pin marked M2. This pin is part of the bottom plate and must be broken out and placed into the hole (6) in the bottom plate.
4. Now reconnect L11-S11, L15-S15, L10-S10 and L01-N01 by **replacing** the cables by the cables of the cable extension kit 4822 310 10674.
5. By now the video processing is totally reconnected.
6. In case audio reproduction is required:
   For non-dolby sets:
   * Reconnect the Audio Module to the audio amplifier on the LSP (I28-L28).
   * Disconnect the plug at the left speaker side (seen from the rear).
   * Reconnect the green connector L38 (now the right speaker (seen from the rear) is connected).

   For dolby sets the centre speaker can be used or the Left and Right speaker by connecting this cable to V32 on the Surround Sound panel.

   Remark: Leave the special pin in the special hole on the bottom plate of the set after the repair.

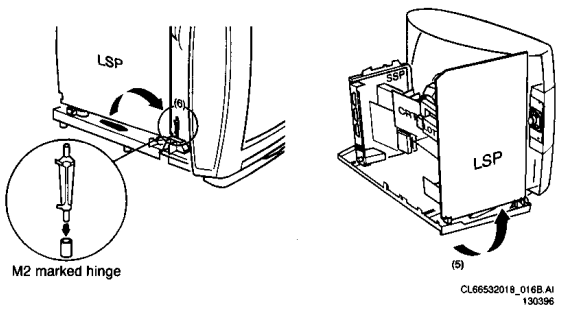

Fig. 4.2

Vertical service position SSP (solder side)

1. To reach for the SSP first the plastic rear cover plate (7) must be removed by putting a screwdriver in the hole (8) and move it upwards. Now the rear cover plate can be removed by lifting it in the direction of the arrow.

2. To have access to the copper side of the SSP, the brackets clicked on the left side (seen from the back) from the SSP bracket must be removed:
   * Upper bracket; Pushing the click (9) away and slide the bracket according the arrow upwards.
   * Lower bracket; First dismount the upper bracket, then push click (10) away and pulling it upwards according the arrow.

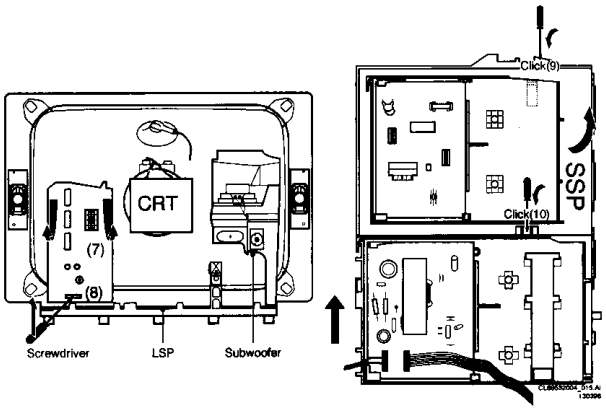

Fig. 4.3

Horizontal service position SSP (component side)

1. Push down the clicks of the SSP bracket (11) and simultaneously shift the complete SSP bracket including panels to the left (seen from the rear).

2. Take the SSP bracket (including all panels) out of the bottom plate and shift it a little to the right (seen from the side).

3. Put the SSP-bracket in the special holes on the bottom plate.

4. Now the SSP component side and all the panels mounted on the SSP are accessible.

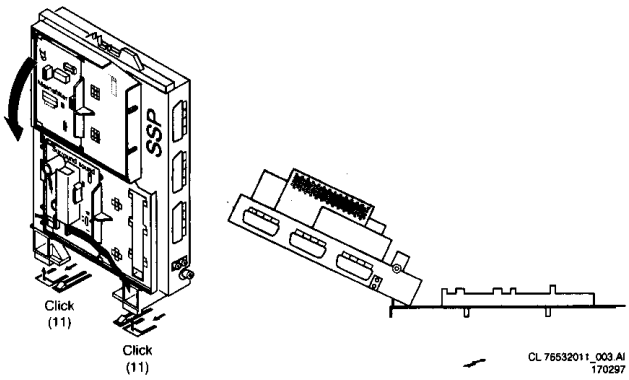

Fig. 4.4

Extra service position SSP for front operation (FL5)

1. Push the clicks of the SSP bracket down and at the same time slide the entire SSP bracket, including the panels, to the left (viewed from the rear)

2. Where necessary remove the wiring from its clicks

3. Tilt the SSP bracket (with all panels) into its 30 degree position

This 'extra' service position for the SSP bracket can be used in all MD2.2 sets.

Service position Feature Box by using cable extension kit 4822 310 10674

With the use of the same extension kit as used for the vertical LSP service position, the Feature Box can be placed away from the SSP.

1. Put the SSP in the horizontal service position.

2. Remove the fixation bracket which holds the feature box and the IF-module by unscrewing the 2 screws (12) and then take out the fixation bracket. Take care for the 2 clicks of this bracket clicked in the feature Box shielding.

3. Click out the Feature Box and connect it to the SSP making use of the cable extension kit 4822 310 10674.

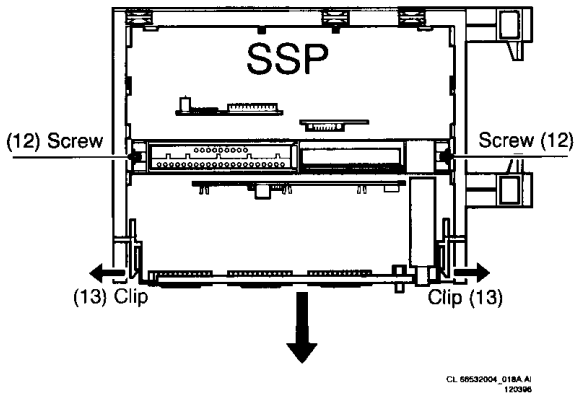

Fig. 4.5

Service position SSP PWB

First remove all cables where needed. Then remove the screws (12) in the bracket. The SSP PWB can be removed after loosing the two clicks (13), then slided backwards (in the direction of the arrow on the SSP bracket) and then taken out of the bracket.

Mechanical instructions

Removing the small panels out of brackets clicked on the SSP bracket

To dismount the panels itself which are mounted in the brackets clicked on the SSP bracket, the following has to be done:

- Upper panel; Open click 14 and 15 and take out the panel mounted in the upper bracket. Lay the panel on a table.
- Lower panel; Open click 16 and 17 and take out the panel mounted in the lower bracket. Lay the panel on a table.

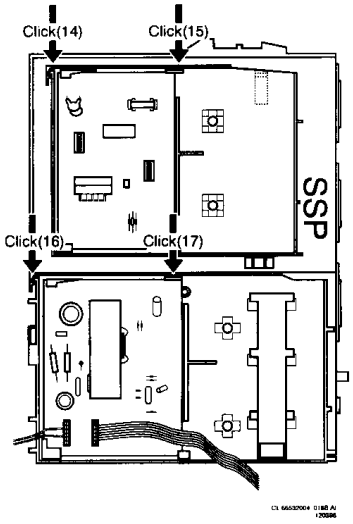

Fig. 4.6

Two possibilities:

Service position bracket including panels:

1. Remove the fixing bracket by means of its clicks.

2. Remove the subwoofer so that a place is created to be able to remove the module directly.

3. Push both clicks (18 + 19), which secure the large bracket to the bottom plate, upwards at the same time.

4. Pull the entire module to the back while the clicks are being held up.

5. Remove the entire bracket, including the modules, from the bottom plate.

6. Lay the entire module with the modules, pointing upwards, on the bottom plate.

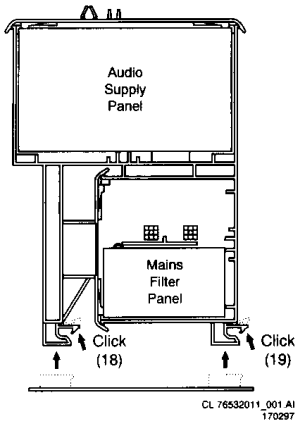

Fig. 4.7

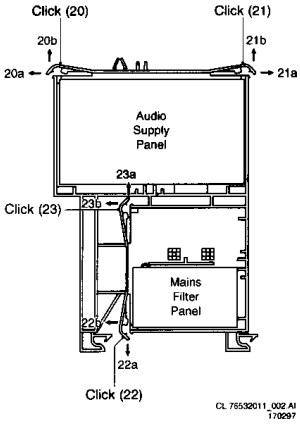

Fig. 4.8

Service position of the 'Audio Power Supply' or the 'Mains Filter' itself:

1. Leave the large bracket in its vertical position, but remove the fixing bracket between the large bracket and the subwoofer.

2. Click the large clicks on the large bracket free.
   * For the 'Audio Power Supply' the two large clicks (20 + 21) on the top.
   * For the 'Mains Filter' the large click on the bottom left (22) and then the small click halfway on the left (23).

3. Remove the wiring from its clamps.

4. The module can now be removed from the bracket and placed on a table.

5. During assembly make sure that the module is re-clamped correctly BEHIND its grip.

Service position VGA interface panel in the 28"

1. Carefully remove the entire bottom plate including LSP and SSP from the cabinet and place it a few centimetres to the rear (watch out for the picture tube panel).

2. Pull the wiring loose to the front.

3. Click the VGA interface panel free.

Service position front operation

In sets with front operation (FL5 styling), knobs and LED's are located under the picture tube. All front panels and centre loudspeakers are mounted in a plastic bracket which can be removed in its entirety.

1. In order to be able to remove the bracket, the screws between the picture tube and the bottom plate on the inside of the cabinet are to be removed together with the screws which are located on the bottom of the cabinet. In order to be able to remove these screws easily the set will have to be turned. It is preferred that the set is turned with the back cover fitted.Turn the set so that the picture tube is pointing down and place the set carefully onto a soft and clean surface.

2. After the screws have been removed the set can be brought back to the normal position.

3. After removing the screws on the inside, the bracket can be removed via the bottom.

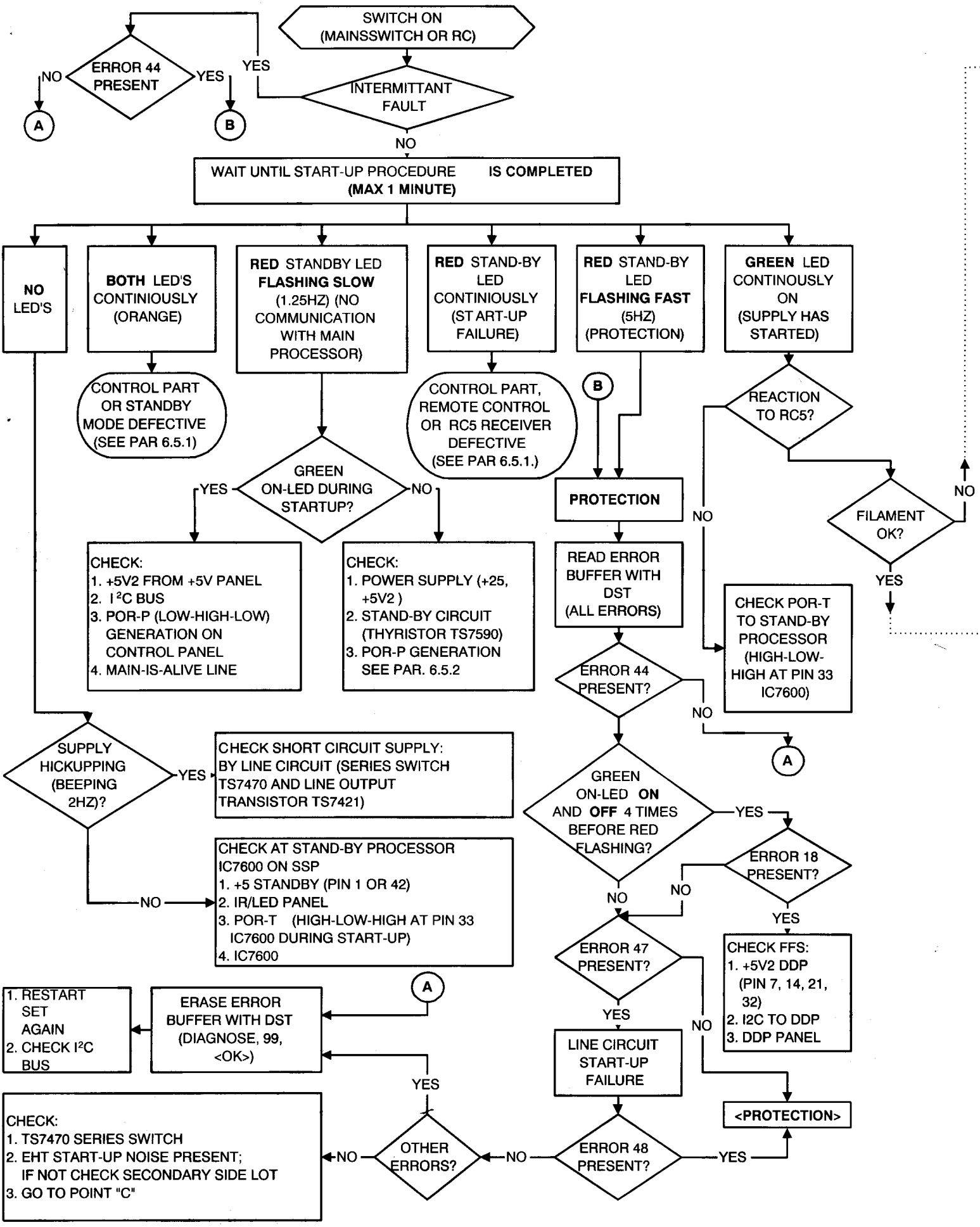
SWITCH ON (MAINSSWITCH OR RC)
INTERMITTANT FAULT
YES
ERROR 44 PRESENT
NO
YES
A
B
NO
WAIT UNTIL START-UP PROCEDURE IS COMPLETED (MAX 1 MINUTE)
NO LED'S
BOTH LED'S CONTINIOUSLY (ORANGE)
RED STANDBY LED FLASHING SLOW (1.25HZ) (NO COMMUNICATION WITH MAIN PROCESSOR)
RED STAND-BY LED CONTINIOUSLY (START-UP FAILURE)
RED STAND-BY LED FLASHING FAST (5HZ) (PROTECTION)
GREEN LED CONTINOUSLY ON (SUPPLY HAS STARTED)
CONTROL PART OR STANDBY MODE DEFECTIVE (SEE PAR 6.5.1)
CONTROL PART, REMOTE CONTROL OR RC5 RECEIVER DEFECTIVE (SEE PAR 6.5.1.)
B
REACTION TO RC5?
GREEN ON-LED DURING STARTUP?
YES
NO
PROTECTION
NO
FILAMENT OK?
NO
YES
CHECK:
1. +5V2 FROM +5V PANEL
2. I²C BUS
3. POR-P (LOW-HIGH-LOW) GENERATION ON CONTROL PANEL
4. MAIN-IS-ALIVE LINE
CHECK:
1. POWER SUPPLY (+25, +5V2)
2. STAND-BY CIRCUIT (THYRISTOR TS7590)
3. POR-P GENERATION SEE PAR. 6.5.2
READ ERROR BUFFER WITH DST (ALL ERRORS)
CHECK POR-T TO STAND-BY PROCESSOR (HIGH-LOW-HIGH AT PIN 33 IC7600)
ERROR 44 PRESENT?
NO
A
SUPPLY HICKUPPING (BEEPING 2HZ)?
YES
CHECK SHORT CIRCUIT SUPPLY: BY LINE CIRCUIT (SERIES SWITCH TS7470 AND LINE OUTPUT TRANSISTOR TS7421)
GREEN ON-LED ON AND OFF 4 TIMES BEFORE RED FLASHING?
YES
ERROR 18 PRESENT?
NO
NO
CHECK AT STAND-BY PROCESSOR IC7600 ON SSP
1. +5 STANDBY (PIN 1 OR 42)
2. IR/LED PANEL
3. POR-T (HIGH-LOW-HIGH AT PIN 33 IC7600 DURING START-UP)
4. IC7600
NO
YES
ERROR 47 PRESENT?
CHECK FFS:
1. +5V2 DDP (PIN 7, 14, 21, 32)
2. I2C TO DDP
3. DDP PANEL
A
YES
NO
1. RESTART SET AGAIN
2. CHECK I²C BUS
ERASE ERROR BUFFER WITH DST (DIAGNOSE, 99, <OK>)
LINE CIRCUIT START-UP FAILURE
YES
<PROTECTION>
CHECK:
1. TS7470 SERIES SWITCH
2. EHT START-UP NOISE PRESENT; IF NOT CHECK SECONDARY SIDE LOT
3. GO TO POINT "C"
NO
OTHER ERRORS?
NO
ERROR 48 PRESENT?
YES

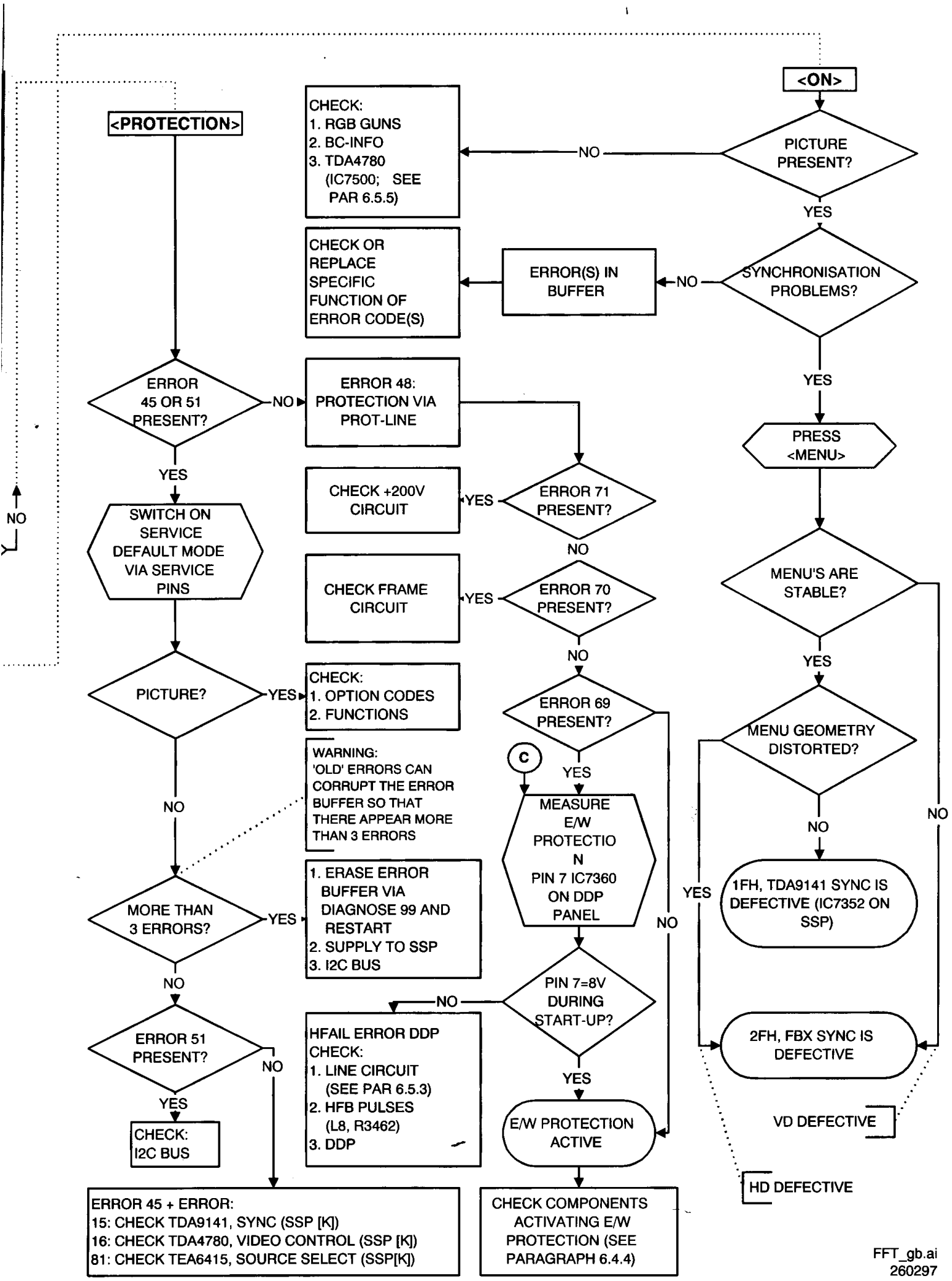
<ON>
PICTURE PRESENT?
NO
CHECK:
1. RGB GUNS
2. BC-INFO
3. TDA4780
(IC7500; SEE PAR 6.5.5)
YES
SYNCHRONISATION PROBLEMS?
NO
ERROR(S) IN BUFFER
CHECK OR REPLACE SPECIFIC FUNCTION OF ERROR CODE(S)
YES
PRESS <MENU>
MENU'S ARE STABLE?
YES
MENU GEOMETRY DISTORTED?
NO
1FH, TDA9141 SYNC IS DEFECTIVE (IC7352 ON SSP)
NO
2FH, FBX SYNC IS DEFECTIVE
VD DEFECTIVE
HD DEFECTIVE
YES
<PROTECTION>
ERROR 45 OR 51 PRESENT?
NO
ERROR 48: PROTECTION VIA PROT-LINE
YES
SWITCH ON SERVICE DEFAULT MODE VIA SERVICE PINS
PICTURE?
YES
CHECK:
1. OPTION CODES
2. FUNCTIONS
NO
WARNING:
'OLD' ERRORS CAN CORRUPT THE ERROR BUFFER SO THAT THERE APPEAR MORE THAN 3 ERRORS
MORE THAN 3 ERRORS?
YES
1. ERASE ERROR BUFFER VIA DIAGNOSE 99 AND RESTART
2. SUPPLY TO SSP
3. I2C BUS
NO
ERROR 51 PRESENT?
NO
YES
CHECK:
I2C BUS
ERROR 45 + ERROR:
15: CHECK TDA9141, SYNC (SSP [K])
16: CHECK TDA4780, VIDEO CONTROL (SSP [K])
81: CHECK TEA6415, SOURCE SELECT (SSP[K])
ERROR 71 PRESENT?
YES
CHECK +200V CIRCUIT
NO
ERROR 70 PRESENT?
YES
CHECK FRAME CIRCUIT
NO
ERROR 69 PRESENT?
YES
C
MEASURE E/W PROTECTIO N PIN 7 IC7360 ON DDP PANEL
PIN 7=8V DURING START-UP?
NO
HFAIL ERROR DDP
CHECK:
1. LINE CIRCUIT (SEE PAR 6.5.3)
2. HFB PULSES (L8, R3462)
3. DDP
YES
E/W PROTECTION ACTIVE
CHECK COMPONENTS ACTIVATING E/W PROTECTION (SEE PARAGRAPH 6.4.4)
NO
FFT_gb.ai
260297

Protection diagram

MD 2.21/2.22/2.23 E protection diagram (2fH versions)

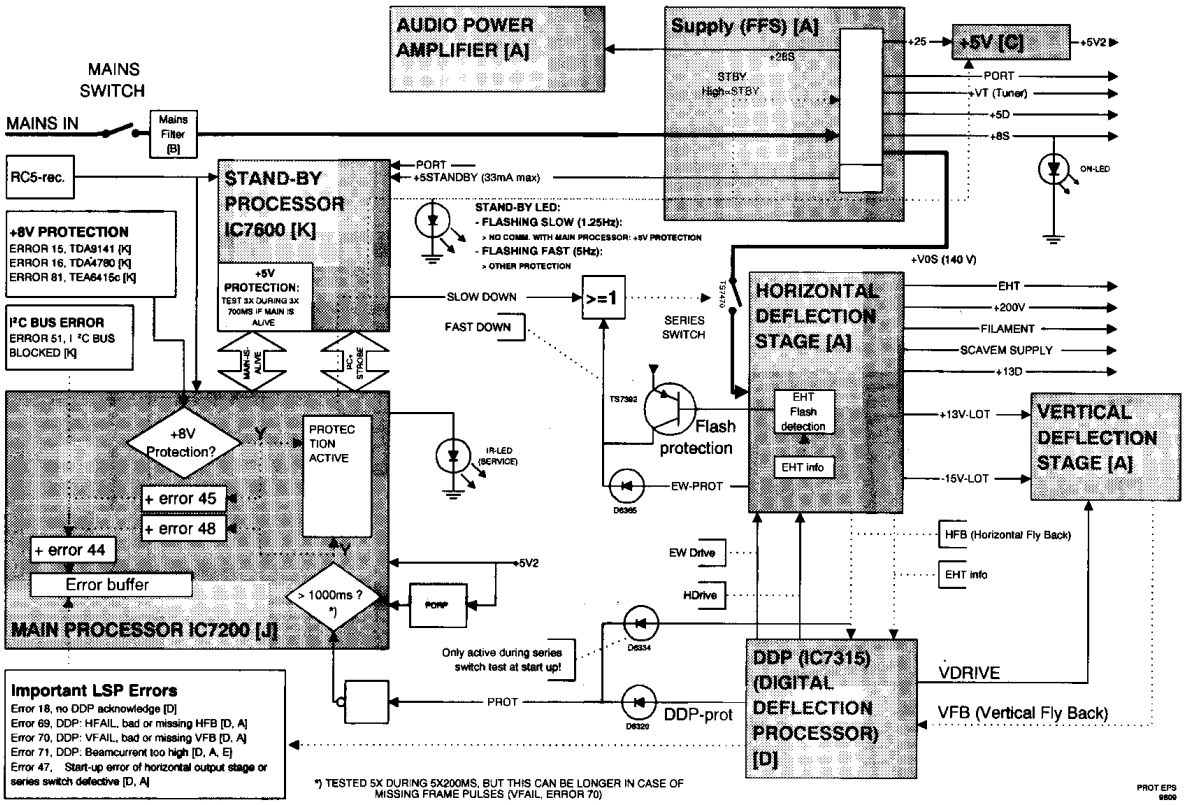

Error code table

Error	Device	Description	Item	Panel	Defective module indication in SAM	MD2.1	MD2.2
0	no error		-	-	No errors	x	x
4	ST24C16B1	NVM EAROM 2048 bytes	7201	SSP	Control	K	K
6	UV916S	Tuner	1100	SSP	Tuner	K	K
15	TDA914X	Video + sync processor	7352	SSP	Video processing (SSP)	K	K
16	TDA4780	Video controller	7500	SSP	Video control	K	K
18	TDA9155	DDP processor	7315	DDP (Geometry)	Geomtry processor	D	D
28	SAA5270	TXT processor	7400	TXT	Teletext	J	J
29	PCF83CE652_ featurebox	FBX microprocessor	7505	FBX	Feature box	M	M
33	SDA9288_2_pip2	PIP-processor	7788	PIP	PIP	S	S
34	UV12xx	PIP or DW tuner	1775 / E9F1	PIP / DW	PIP / Video DualScreen	S	S / AC
36	PCF8574_pip	I/O-expander for PIP forced colour	7860	PIP	PIP	S	S
37	SAB9077H_dwi	PIPO (Picture In Picture Out)	IC9A	Video DualScreen	Video DualScreen	-	AC
38	PCF8574_dwi	I/O-expander for DW	IC9N	Video DualScreen	Video DualScreen	-	AC
39	TDA914x_dwi	Video + Sync processor for DW	IC9J	Video DualScreen	Video DualScreen	-	AC
44	SW_protection (uP has decided for protection)	Generated after error code 51, 18, 69, 70 or 71	-	-	SW Protection	x	x
45	Supply_8V	TDA4780 + TDA914x + TEA6415 (+ TDA9860)	-	-	+8V Supply error	K	K
47	+140Vserie_switch_ protection	Series switch protection (only checked at start up)	-	LSP	Series switch 140V	A	A
48	Protection (prot-line)	Hardware protection (activated by the PROT-line)	-	LSP + DDP	HW protection	A+D	A+D
51	I2c_slow_bus	Blocked I2c slow-bus (shorted SDA, SCL or SDA to SCL)	-	-	I2C bus blocked	x	x
58	TDA9860_vds	Sound processor on Dolby Audio Module for Video DualScreen	7590	Dolby Audio Module	Audio module	-	P
64	TDA9177_LTP	Line Transient Processor	7580	SSP	Video control / picture signal imrpov.	-	K
69	Protection_hfail	Horizontal deflection error (DDP protection)	-	DDP + LSP	Horizontal circuit	D	D
70	Protection_vfail	Vertical deflection error (DDP protection)	-	DDP + LSP	Vertical circuit	D	D
71	Protection_overcurrent	Overcurrent protection (DDP protection); beam current too high	-	DDP + LSP	Beam current	D	D
79	TDA9860_DW	Sound processor for DW	-	-	-	-	AC
80	MSP3400/3410	FM/NICAM decoder and audio source select	7353	Audio module	Audio module	O/P	O/P
81	TEA6415	Source select video matrix	7406	SSP	Source select	K	K
82	TMP47C640/840	Standby(I/O)-processor	7600	SSP	Standby processor	K	K
85	SAA7710T	Dolby processor	7600	Dolby audio	Audio module	O/P	O/P
86	PCF8574A	I/O-expander for frame rotation	7050	N/S + ROT	Rotation panel	F2	F2
88	TSA5520	Wireless dolby	1403	Wireless dolby trans	Dolbt transmitter	-	AE1

In this chapter the following paragraphs are included:

6.1 Test points
6.2 Service modes and Dealer Service Tool
6.3 Error codes
6.4 Protections
6.5 Faultfinding and repair tips

6.1 Test points

The MD2 chassis is equipped with test points in the service printing. These test points are referring to the functional blocks:

* P1-P2-P3, etc: Test points for the power supply
* L1-L2-L3, etc: Test points for the line drive and line output circuitry
* F1-F2-F3, etc: Test points for the frame drive and frame output circuitry
* S1-S2-S3, etc: Test points for the synchronisation circuitry
* V1-V2-V3, etc: Test points for the video processing circuitry
* I1-I2-I3, etc: Test points for the IF part
* A1-A2-A3, etc: Test points for the audio processing circuitry
* C1-C2-C3, etc: Test points for the control circuitry
* T1-T2-T3, etc: Test points for the teletext processing circuitry

The numbering is done in a for diagnostics logical sequence; always start diagnosing within a functional block in the sequence of the relevant test points for that functional block.

6.2 Service modes and Dealer Service Tool (DST)

Together with the GFL chassis a dealer remote control is introduced, the RC7150 which is called the Dealer Service Tool or DST. This RC7150 is a remote control for the dealer and the servicer and is fully compatible with the MD2.

6.2.1 Installation features for the dealer

The dealer can use this remote control for programming the TV-set with presets, TV-settings, Dish settings and Logo's. Just like the GFL, the MD2 and a lot of existing sets like MD1, AA5, FL, GR2, G90B, G110 and the new Philips VCR series using the so called NORA deck can be programmed with it.

One of the innovative features of the Dealer Service Tool is the way in which it is programmed. A complete list of presets can simply be downloaded from the MD2 (and GFL) into the Dealer Service Tool.
To make this download possible, a two way communication link, the so called 'dealer link', is set up between the RC7150 and the MD2 TV-set. To establish this link, the MD2 sets are equipped with an additional Infra Red transmitter LED and the RC7150 has an Infra Red receiver on board. The Dealer Link however only works on short distance, up to 10 cm or 4 inches.
For explanation of the installation features of the DST, the directions for use of the DST are recommended (use code 4 for correct downloading).

The figures below show the position of the DST for the different types of styling:

Styling with top centre operation:

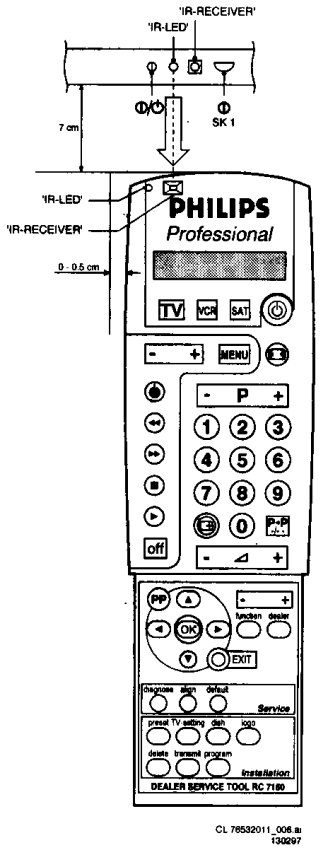

Fig. 6.1

Styling with top right operation:

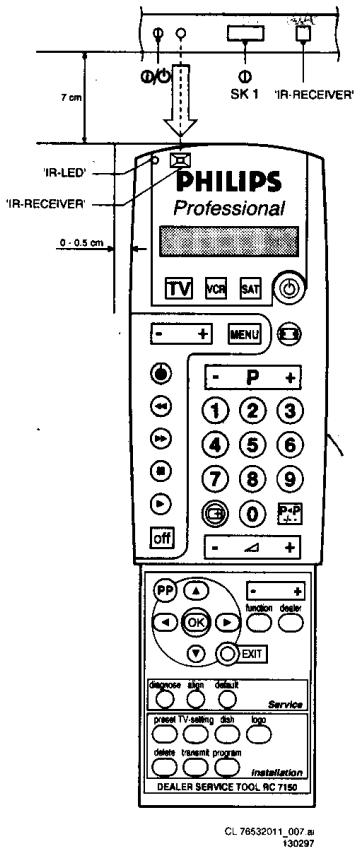

Fig. 6.2

Protections, Faultfinding and Repair tips

Styling with front operation:

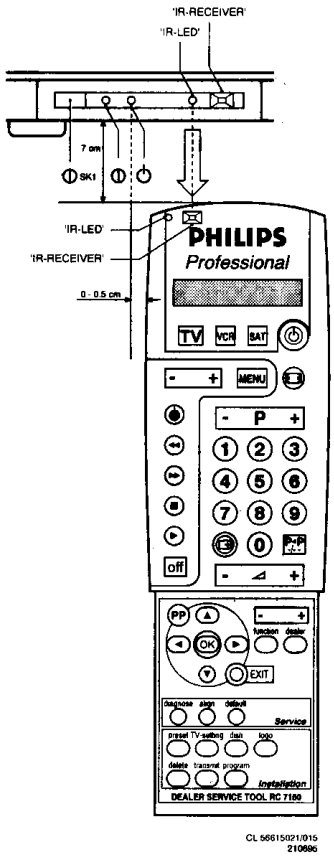

Fig. 6.3

Dealer Mode
Press the 'DEALER' key on the DST to enter the Dealer Mode. In the dealer mode some settings can be changed in order to customize the set.

6.2.2 Diagnose features for the servicer

The MD2 sets can be put in the various service modes via the DST RC7150. The Service Alignment Mode and the Service Default Mode can also be entered by connecting the pins on the SSP.

Service Default Mode (SDM)
Specification of the SDM:
- Tuning frequency 475.25 MHz;
- TV-system for BGLM set to BG, for BGLL'I sets to LL';
- All picture settings at 50% (brightness, colour, contrast, HUE);
- All sound settings at 50% except volume at 25% (so bass, treble, balance at 50%, volume at 25%);
- All service-unfriendly modes are disabled (like sleep timer, child lock, automatic switch off, blue mute).

Entering the SDM can be done in 2 ways:
- By the 'DEFAULT' key on the DST while the set is in the normal operation mode.
- By shortcircuiting the two pins on the component side of the SSP with the indication 'SERVICE DEFAULT MODE' (activation can be performed in all modes except when the set has a problem with the main-processor (indicated by a slow (1.25Hz) blanking LED)).

Note: If the SDM is entered via the pins, the Series Switch protection (error 47) and the +8V protection (error 45) is de-activated.

Exiting the SDM can only be done via the STANDBY command. By switching off-on the set with the mains switch the MD2 will come up again in the SDM.

Service Alignment Mode (SAM)
Specification of the SAM:
- Software alignments (see chapter 8);
- Option settings (see chapter 8);
- Error buffer reading and erasing. The most recent error code is displayed on the left side;
- Operation counter;
- Software version.

Entering the SAM can be done in 2 ways:
- By the 'ALIGN' key on the DST while the set is in the normal operation mode (or SDM). Enter the password '3-1-4-0' and press OK.
- By shortcircuiting the two pins on the component side of the SSP with the indication 'SERVICE ALIGNMENT MODE' (activation can be performed in all modes except when the set has a problem with the main-processor (indicated by a slow (1.25Hz) blanking LED)).

  Note: If the SAM is entered via the pins, the Series Switch protection (error 47) and the +8V protection (error 45) is de-activated.

Exiting the SAM can be done via the MENU command or via switching off-on the set with the mains switch.

Customer Service Mode (CSM)
In order to be able to deal with 'house repairs' and ' nuisance calls' better in the future, the so-called 'Customer Service Mode' will introduced in all future chassis relevant for this. This 'Customer Service Mode' (CSM) is a special service mode which can be activated and deactivated by the customer. This CSM is a 'read only' mode, therefore the customer is unable to write into this.

The customer activates the CSM by pressing and holding the 'MUTE' button on the remote control for at least 4 seconds at the same time as pressing the MENU button on the TV. This activation only works if there is no menu on the screen.

The customer deactivates the CSM by:
- selecting any button on the remote control;
- switching the set off (mains switch) and then switching back on again.

The following settings are displayed in the CSM:
- Software version.
- Error code buffer.
- Overall setting of the PP (Personal Preference) values for volume, colour, brightness, contrast (all 0-63) and focus (0-4).
- Dolby Signalling detection indication: 'Present' or 'Not Present'.
- Attention: the presence of Dolby can only be tested by the software on the Dolby Signalling Bit. If a Dolby transmission is therefore received without a Dolby Signalling Bit, then this indicator will show 'not present' even though such a Dolby transmission is received.

- Overall setting of the Surround Mode: 'Pro Logic' or 'Dolby 3 Stereo' or 'Hall' or 'Off'.
- Overall setting of the Rear Volume (0-63); volume of the surround sound speakers in 'Pro Logic' or 'Dolby 3 Stereo' or 'Hall' mode.
- Overall setting of the Centre Volume (0-63); volume of the centre speakers in 'Pro Logic' or 'Dolby 3 Stereo' mode.
- Local setting of the DNR and a value for the noise number (good signal 0-2, average signal 4-5, bad signal 7 or higher).
- Overall setting of the Digital Option ('100 Hz', 'Digital Scan' or 'Natural motion').
- Local setting / detection of TV and Audio system information: 'NICAM'/'MONO'/'A2' (analogue stereo sound) /'DUAL' and 'PAL'/'SECAM'/'NTSC'.
- Detuned bit is 'Yes' or 'No';
  This bit indicates whether the selected programme is stored after a micro-search or not: for 'Yes' the programme is stored via manual entry of the frequency when a transmitter was not present on that frequency. In that case the TV will attempt to perform a micro-search every time the programme number is selected. Once the micro-search has been successful the Detuned Bit will be set to 'No'.
- Overall setting of the configuration menu for 'VCR type' is 'PALplus' or 'Non PALplus';
  If PALplus VCR type is selected the luminance and chrominance on the PALplus panel is decoded for the VCR signal. If this configuration is set incorrectly this will result is stripes on the picture.
- Overall setting in the configuration menu for 'CD-i/Photo-CD' is 'Present' or 'Not Present';
  If 'Present' is selected the starting point is a top quality signal and a number of settings are therefore changed automatically. If this configuration is set incorrectly this will result in a worse picture quality.

All settings are displayed in 'real time'. The settings displayed are therefore the settings which were set at the moment of activating the CSM. The 'overall' settings apply for all programmes, the 'local' settings are only for that programme viewed that was selected at the moment at which the CSM was activated.

The screen appears as follows:

```
CUSTOMER SERVICE MENU 1

 1 SWVersion          .............
 2 Error 1             ... ... ... ... ...
 3 Error 2             ... ... ... ... ...
 4 PP Volume           ..
 5 PP Colour           ..
 6 PP Brightness       ..
 7 PP Constrast        ..
 8 Sharpness           .
 9 Dolby              .....
10 Surround mode      .............
```

76532013_008.AI
060397

Fig. 6.4a

```
CUSTOMER SERVICE MENU 2

11 Rear Volume          .
12 Centre Volume        .
13 DNR                 ...
14 Noise Figure         .
15 Digital option      ......
16 Colour System       .....
17 TV System           .....
18 Audio System        .....
19 Detuned bit         .....
20 PALplus             .............
21 CDI                 .............
```

76532013_009.AI
060397

Fig. 6.4b

Diagnose Mode (only active during transmission of error codes and diagnose 99)
This mode is activated by the DIAGNOSE command on the DST for reading the error codes and erasing the error buffer by the DST even when the set is in protection and so there is no picture (assuming that the power supply and the control part are working). For activation see paragraph 6.3. The diagnose Mode is only a temporarily mode (the set will go back to the previous mode), and can not be switched on permanently.

Note: The diagnose mode can not be entered if the SAM is activated.

6.3 Error codes

6.3.1 Reading error codes from the error buffer

The error buffer can be read in 2 ways:

1. On the screen via the Service Alignment Mode (SAM): In case picture is OK, the error buffer can be read the easiest via the SAM. In the main menu of the SAM the last 10 different error codes occurred are displayed. The most recent detected error code is displayed on the left side, so e.g.:

0 0 0 0 0	means no error codes present in the buffer
3 0 0 0 0	means one error code present in the buffer; error code 3
2 3 0 0 0	means two error codes present in the buffer; error code 2 is the most recent, error code 3 is detected before 2.

2. On the display of the DST:
   If an error has been detected by the MD2 chassis, the set might go into protection. Without the presence of a picture the errors can be read by the DST, as long as the main-processor is still active (green LED continuous and red LED blinking fast (5Hz); in case of red LED is blinking slow (1,25Hz) there is a main-processor problem).

To transmit the errors from the TV to the DST:
1. Press the 'DIAGNOSE' key (in all modes except the SAM);
2. Press '1' to view the last error detected;
3. Hold the DST 5 to 10 cm from in front of the stand-by LED of the set (the IR-sending LED of MD2 is located near the stand-by LED);
4. Press the 'OK' key.

The error is represented by a 2 digit number.
The 2 digits on the DST are displayed sequentially, with a pause before it is repeated. The digit after the pause is the 1st digit.
If the display reads 4 - 7, the error code is 47. To read other error codes, press 'DIAGNOSE' and one of the other digit keys.

Note:
- If the DST cannot communicate to the MD2 in a proper way, ERROR 2 is shown in the display of the DST. Trying again by changing the DST position a little bit might often help.
- If the error buffer of MD2 is empty, no errors are displayed by the DST; the display remains blank.

6.3.2 *Clearing the error buffer*

The error buffer can be cleared in 2 ways:
1. In the SAM by selecting the item RESET ERROR BUFFER in the main menu.
2. By the 'DIAGNOSE 99' command of the DST (in all modes except the SAM). Press the DIAGNOSE key on the DST, followed by 9 and 9 and then <OK>.

6.3.3 *Error code table*

See page 8.

Remark: If on the DST the text 'ERROR 2' is displayed, this means that the communication from the TV to the DST has failed.

6.4 Protections

6.4.1 *Protection-structure*

The MD2 'Protection Diagram' shows the structure of the protection system. See protection diagram on page 8.

Two micro-processors
The MD2 chassis has two micro-processors. The micro-processor on the SSP is the so called I/O- or standby-processor and also remains active in standby. The supply of the standby(I/O)-processor comes from the main supply, both in normal operation as in standby. The standby (I/O)-processor controls the standby-LED, controls the STANDBY line for switching on and off the main supply and the SLOW DOWN line for switching off the supply of the line-deflection-circuitry. In the diagnose mode the standby (I/O)-processor feeds through the RC5-communication to the main-processor.

The communication between both processors happens via I^2C. An additional STROBE-line takes care for addressing of the standby(I/O)-processor as the standby(I/O)-processor does not have a defined I^2C address.
Whether the main-processor is OK, is checked by the MAIN-IS-ALIVE-line. This line also gives an indication whether the +5V2 voltage is present. Via this line also transfer of error codes takes place to prevent that a blocked I^2C bus could avoid this transfer.

The communication between the diagnose-information of the Dealer Service Tool (diagnose mode) goes via an IR service LED which is connected to the main-processor. This means that in case of protection the power supply and the main-processor must be switched out their standby mode in order to transfer diagnose-information. After calling the error codes from the error buffer (via the DST), the standby(I/O)-processor shortly starts up the main-supply and the main-processor, after which the main-processor sends the codes to the IR service LED. After the transfer the main-processor and the power supply return to their previous mode (in case of protection the power supply will return to standby mode and the main-processor will be switched off again).

Different protection-levels
Via the Series Switch TS7470 the supply of the line-deflection stage can be switched off and on. Normally (during start-up and switch off) the Series Switch TS7470 is controlled by the SLOW DOWN signal from the standby (I/O)-processor, but in case of an Urgent Alarm the FAST DOWN switches off the line-deflection stage directly. An Urgent Alarm is given to the main-processor via the PROT-line and an inverter. The PROT-line is high in case it is active (low at the input pin 62 of the main-processor).

The protection-system of the chassis has three different levels:

- False Alarm
  During a short time something is wrong, but further action is not required. Examples are: short absence of frame-synchronisation-pulses for example after a program-switch.

- Real Alarm
  In case something is wrong, but immediate action is not required. The processing takes place by the both microprocessors and can take a few seconds.
  The standby(I/O)-processor switches of the line-deflection stage by - via the SLOW DOWN line - opening the Series Switch TS7470. After that via the STANDBY line the supply is switched off.

- Urgent alarm
  A problem is observed upon which immediate switching off of the line-deflection circuitry is required. Via the FAST DOWN line the Series Switch TS7470 is opened. In case the protection-situation remains present after 5 x testing (after 200ms, 400ms, 600ms, 800ms and 1000ms), in that case the main-processor takes over the processing as a 'Real Alarm'; the main-processor places information in the error code buffer and the standby(I/O)-processor switches off the power supply.

An 'Urgent Alarm' can be activated by the East-West protection-circuitry or by an short peak in the beam-current (for example after a picture tube discharge (flash)).

6.4.2 *Protection via the DDP (IC7315 on the DDP panel)*

The protection output of the DDP is connected to the PROT-line via D6320. Only in case this protection is still active after 5 x testing (every 200ms), the main-processor orders the standby(I/O)-processor to switch off the line-deflection-circuitry (via the SLOW DOWN) and the power supply via the STANDBY command.

Just before switching off, the status register of the DDP is read out and the corresponding error is placed in the error code buffer together with error 48 (Protection). To indicate the protection-situation the stand-by LED starts blinking fast. Via the DST the error buffer can be read.

In case the DDP makes the PROT-line high, the status register of the DDP contains information concerning the reason of the protection. After the main-processor has read the status register via I²C, the PROT-line will be reset and the status register erased. In case the error repeats, the PROT-line becomes high again and the status register is filled again.

The DDP can detect 3 errors:
- Horizontal Failure: HFB pulses do not have the right shape or are not present (error 69).
- Vertical Failure: VFB pulses do not have the right shape or are not present (error 70).
- EHT overcurrent: Too high beam current (EHT-info) (error 71).

If the DDP does not communicate any more with the main-processor, the main-processor places error 18 in the error buffer.

Remark: During the start up the DDP can not check the HFB and VFB. To check the behaviour of the HFB pulses during the start up anyhow, the circuitry around Opamp IC7360 is present (see start up protections).

6.4.3 *Start up protections (Series Switch test)*

During start up of the set, the Series Switch TS7470 is tested by Opamp IC7360 on the DDP panel. If the Series Switch TS7470 does not function well, error 47 is generated.

The start up procedure is normally processed as follows:
1. Startup of supply voltages (so also +5V and +8V of the DDP)
   → The PROT line becomes high (active) via opamp IC7360 on the DDP panel (output pin 1 of the Opamp IC7360 becomes high in case no HFB pulses are present; this output is coupled to the PROT-line via diode D6334).
2. Approx 800ms after the supply voltages are present, the DDP starts up (HDRIVE) and tries to start the line-circuitry.
   → The DDP measures the presence of the HFB pulses; these pulses should be absent as the Series Switch is still open.
   → Only in case the HFB remains absent, the PROT-line remains high (active).
3. Only in case the PROT-line is still high approx 200ms after starting up the HDRIVE, the software will close the Series Switch TS7470 (so in a correct situation approx 1000ms after the supply voltages are present the Series Switch is closed)
   → The HFB pulses should be present now (so indeed the Series Switch has closed)
4. Only in case the HFB is present (line is OK and Series Switch is indeed closed), the PROT-line becomes low as both the DDP and Opamp IC7360 are receiving HFB pulses.
5. Everything is OK.

Correct situation

B = 5V/div PROT line at 7L11
A = 10V/div (35Vtt) HFB at test point L4
time base = 0.5S/div

In practice:
- In case the Series Switch is closed continuously (so defective), flyback pulses are already present at point 2. As a result the PROT-line already becomes low at point 2 (already 800ms after the supply voltages are present). The main-processor will order the standby(I/O)-processor to switch the power supply to stand-by and places error 47 in the error buffer.
- In case the HFB pulses remain absent after closing the Series Switch TS7470, the PROT-line remains high (points 3). The line circuitry does apparently not start up (well) or the Series Switch does not close. The standby(I/O)-processor will switch the power supply in stand-by after all. Also in this case error 47 is placed in the buffer.

  Attention: Above mentioned means that error 47 is generated in case the line-deflection circuitry can not be start up well. So in case there are problems in the line deflection part during start up, always error 47 will be in the error buffer. Extra errors in the error buffer like error 48 (protection) and error 69 (horizontal failure) indicate that the defect popped up during normal operation.
  After the next first attempt to start up, this will fail and error 47 is added to the buffer. As a result, an error 47 in the error buffer will mostly not be caused by a defective Series Switch TS7470, but has another cause in the line deflection part.

6.4.4 *East-West protection (EW_PROT)*

The East/West protection switches off the Series Switch TS7470 directly via the FAST DOWN signal and diode D6365 on the DDP panel. Because of the FAST DOWN, the Series Switch TS7470 is switched open, no HFB any more and so via the DDP and IC7360 the PROT-line will also become active and so the main-processor can take over the protection-processing. The East/West protection detects a too high current through the East/West power output stage around TS7480.

Note: **A too high current through the East/West stage can be caused by a defective part in the line-deflection circuitry!!!**

The current through the East/West stage is measured on the LSP via 2 precision resistors (R3483 and R3484). In case an error occurs in the line output stage the voltage across these resistors rises. This voltage is fed to the + input pin 5 of Opamp IC7360 on the DDP panel. The - input is connected to a DC-level of approximately 1V1. In case the voltage on the + input of IC7360 (EW_PROT line) becomes higher than 1V1, the output (pin 7) of IC7360 becomes high. The FAST DOWN also becomes high via D6365 and switches off the supply of the line output stage immediately via the Series Switch.
The FAST DOWN is kept high (via D6362) until the power supply is switched into standby (protection) as follows; as the Series Switch is open, no HFB is present any more and so the PROT becomes high by the DDP (error 47 or 48 and 69); after ≥ 1000ms PROT-line high, the protection procedure is started.

As East/west protection does not have a separate error code. Activation of a protection caused by the EW_PROT line can be measured by pin 7 of IC7360 on the DDP. If this pin becomes around 8V for a few seconds, in that case the protection is caused by an activated EW_PROT line.

The East/West protection becomes active in the following cases:

1. Bad contacts in the horizontal deflection circuit:
   * Horizontal deflection coil
   * Linearity corrector coil L5421
   * S-correction capacitor C2432
2. Bad contacts in the flyback capacitor C2425 or C2428
3. Shorted flyback diode D6421.
4. Shortcircuit in E/W transformer (secondary side of T5424 or T5422 (one of the two transformers is present).
5. Shortcircuit in secondary windings of LOT.
6. Shorted S-correction capacitor C2432.
7. Bad solder contacts in the line output stage.
   In case the East/West protection became active, by then the line transistor 7421 can also be defective.

6.4.5 *Software protection*

The software protection is totally managed by the two micro-processors and consists out of a continuous checking on the presence of the +5V2 and the +8V supply voltage and the continuous checking on the activity on the I²C bus.
This checking is done by testing the communication between the two micro-processors and a number of IC's which are connected to this supply voltage. In case one of these IC's do not respond, the protectionprocessing becomes active and the power supply will be switched to stand-by.

+5V2 protection of the standby(I/O)-processor
Via the MAIN-IS-ALIVE line the standby(I/O)-processor checks the presence of the main-processor every 700ms, and after that also the presence of the +5V2 supply voltage.
In case the communication with the mainprocessor fails 3 times after each other, by then the standby(I/O)-processor switches the power supply to standby(I/O) and will blink the standby-LED slowly (1.25Hz). In this case no error code can be written to the error buffer as this is done by the main-processor which does not respond.

+8V protection via the main-processor
The main-processor controls via a number of IC's the presence of the +8V supply voltage on the SSP. This controls is realised via I²C. The following IC's are used for the check of the +8V supply voltage:

- Videocontroller, TDA4780, (error 16)
- Videoprocessor, synchronisation, TDA9141, (error 15)
- Source select, TEA6415C, (error 81)

In case one of the above mentioned IC's does not respond, the error code of that specific IC is stored in the error buffer together with error 45 (+8V error) and the main-processor gives an order to the standby(I/O)-processor to switch the power supply to stand-by.

I^2C protection (error 51)
The (slow) I^2C bus is controlled at each I^2C-command. To do this at every I^2C command a defined start/stop condition is generated. In case this defined start/stop condition fails for a few times after each other, by then error 51 (I^2C error) is placed in the error buffer and the power supply is switched to stand-by.
In case of I^2C protection, the standby(I/O)-processor still can communicate to the main-processor for diagnose mode (reading error codes in the buffer and displaying via the Service LED) by communication via the STROBE line.
I^2C-protection is generated in case the SDA is shorted to earth, in case the SCL is shorted to earth or in case the SDA and the SCL are shorted.

Remark: The (fast) I^2C bus for teletext and the I^2C bus to the EAROM are not checked for protection matters. By the way, both busses are only present on the TXT+control panel (panel with the main-processor).

Flash protection
A special protection is the EHT-info protection. After a 'flash' in the picture tube (a peak current as a result of an internal discharge) this protection switches off the line output stage by the FAST DOWN signal. On the DDP panel the circuitry around TS7390, 7391 en 7392 detects a fast dip in the EHT-info-line. The voltage at this line becomes negative at the moment of a flash. Via the previous called transistors the FAST DOWN line becomes high and so the supply of the line output stage switches off before an increased current can damage the line-deflection circuitry.
As a 'flash' only has a temporary character, the line output stage will start up immediately again. The error is very short and will be denied by the main-processor (false alarm). Within less than 0,5 a second the line circuitry will start up again.

6.4.6 *Rest of the protection diagram*

The voltages generated by the LOT
The line output stage generates different secondary voltages:
- +13VLOT to the picture tube panel (pin 8 of the LOT);
- -15VLOT to the DDP and the picture tube panel (pin 9 of the LOT);
- The filament (heating) of the picture tube (pins 11 and 12);
- The +200V for the RGB output stages (pin 7);
- The supply of the DC shift circuitry (pins 4 and 7);
- The EHT is generated by a diode split. The focus and the VG2 voltage are derived from the EHT. The focus and VG2 potentiometers are integrated in the line output transformer (LOT).

The beam current flows from the 141V through R3450 and 3451. In case of an increasing beam current, the voltage at pin 10 of the LOT and so the voltage across C2450 will decrease.

6.5 Faultfinding and repair tips

See faultfinding trees on page 8.

6.5.1 *General*

1. With most defects the MD2 will give no picture and no sound; the set is in protection (power supply switched to standby, so the entire set is down except the standby(I/O)-processor.
2. **LED indication after start-up procedure is completed (see fault finding tree):**
   - No LED's
     Supply or microprocessor problem.
   - Both LED's continuously
     Control part or standby mode defective.
   - Red LED blinking slow (1.25Hz)
     Protection mode (main proces sor or +5V2).
   - Red LED continuously
     Control part, RC or RC5 defective.
   - Red LED blinking fast (5Hz)
     Protection mode (all other errors).
   - Green LED continuously
     Supply and micro-processors are OK.

   Switch on the set via the mains-switch.
   If the LED's behave properly it is likely that the microprocessor is OK.
   The green LED shows that the power supply has started up. If, after a few seconds, the stand-by LED is blinking an error is detected. Now the supply is switched to stand-by position again. Restart is only possible via the mains-switch or the internal service pins.
3. Audible checks:
   - Do you hear demagnetisation? Yes, mains voltage is present at mains input panel.
   - Do you hear EHT? Yes, supply is OK (DDP and line output stage only works in case VOS (141V) is OK).
   - Power supply is hiccuping? Power supply is shorted. Check the LOT, Series Switch TS7470, line transistor TS7421.
4. Error codes
   In case error 48 is displayed, the protection circuit was active and initiated by the PROT-line. Reading the next error code can give other information about the defect.
   If, for example, the second error is 69 H-FAIL (detected by the DDP because the HFB pulses do not have a correct shape) we know that the line circuit is not working properly.
   Error 18 indicates that the DDP does not communicate to the main-processor. Most likely the power supply is not working or short circuited.

   Some important error buffer possibilities:

44 47	Line error occurred at/before start up
44 48 69	Line error occurred during normal operation
47 44 48 69	Line error occurred during normal operation and after that a try for start up again was performed.

   Line errors can be:
   - ★ Series switch test (this error can only be generated at start up)
   - ★ East/west protection (EW_PROT)
   - ★ HFB fail

   See paragraph 6.5.3 for a faultfinding method within the line output stage.

44 48 70	Frame error (error can occur at/before start up or in normal operation)
44 48 71	EHT-INFO problem, so eg +200D not present or one of the RGB amplifiers is shorted (error can occur at/before start up or in normal operation)
44 (45) 51 82	I^2C bus shorted, or SCL is shorted or SDA is shorted. In case of such I^2C-problems, the error buffer always shows 44 51 82 after erasing the error buffer and then start up again.

5. Overrule start up protection (error 47) and +8V protection (error 45)
   While the set is in the protection mode (power supply in standby), start the SDM or SAM via the service pins at the component side of the SSP.
6. Microprocessor problems
   In case of microprocessor problems, via the shape of the MAIN_IS_ALIVE it can be determined whether the main-processor, the standby(I/O)-processor or the +5V2 has caused the problem. The MAIN_IS_ALIVE must be measured at pin 36 of the standby(I/O)-processor.

Protections, Faultfinding and Repair tips

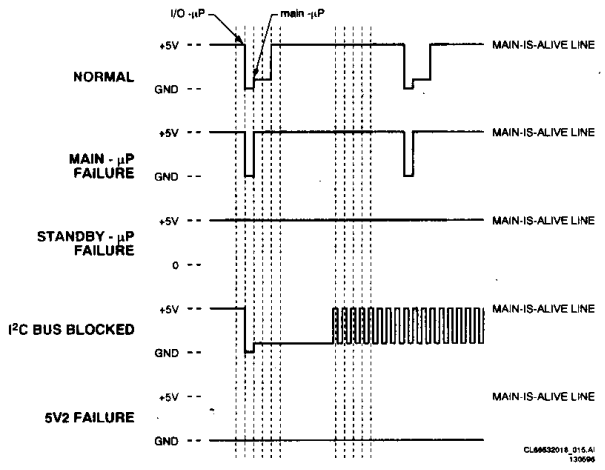

Fig. 6.5

So:

a Pulses without 0V3 steps
→ main-processor failure

b Always 5V2, so no pulses at all
→ standby(I/O)-processor failure

c Always 0V, so no pulses at all
→ +5V2 not present

7. Dolby
In dolby sets, both the clickfit and the surround sound panel can be bypassed (taken out) by connecting the speaker plug in L38 in stead of U36.

6.5.2 *Fault finding in the power supply*

In case of a power supply problem, the power supply can be simplified to a stand alone power supply at low voltages (low risk) as follows:

Control part of the power supply

1. Disconnect the SSP (as a result the line will not function any more, so will not be a load of the power supply any more) or disconnect the line by jumper 9471 on the LSP.
2. Connect an external DC power supply between supply pin 1 IC7520 (via a diode - eg BYD33D - with cathode to supply pin 1 IC7520) and hot earth (e.g earth of the big smoothing capacitor C2505)
3. Connect a oscilloscope to test point P5 at pin 3 IC7520.
4. Turn up the external DC supply voltage slowly to 17V DC.
Remark: The IC starts at a supply voltage of approx 14V DC, after that the supply voltage can drop to approx 9V DC.
At approx 18V DC, overvoltage protection becomes active, by then the supply voltage should first drop below 7V DC before a new start-up is performed by turning up the supply voltage above 14V DC.
5. In the correct situation the oscillogram should be as displayed below. If not the power supply control part (IC7520 or periphery at pins 9, 10 or 11) is defective.

A = 5V/div
time base = 5µS/div
→ 40kHz pulse

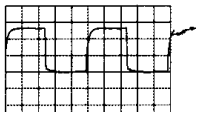

Energy transfer of the power supply (only if control part is OK)

6. Apply action 1, 2 and 4 (if not already done)
7. Connect a lamp of 220V 100W across the VOS output capacitor C2569.
8. Connect a 1k resistor between the +8S (connector 4L10) and the STANDBY line (between R3595 and R3596) to switch the power supply to normal operation.
9. Connect the mains to a VARIAC but leave it at 0
10. Connect a voltmeter across C2569 and a scope between the drain of TS7541 and hot earth.
11. Slowly increase the mains input voltage by the VARIAC (in this way further damage to the power supply can be avoided).
The oscillograms for the following mains voltage are given:

Mains in voltage
10V AC: 20kHz and VOS 7V5
20V AC: 40kHz and VOS 30V
40V AC: 40kHz and VOS 80V
65V AC: 40kHz and VOS 140V
>65V AC: Stable situation, so 40kHz and 140V

1. Mains in 10V AC
A = 10V/div
time base = 10µS/div
→ 20kHz pulse
→ VOS 7V5

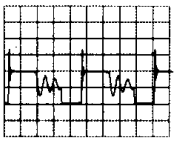

2. Mains in 20V AC
A = 20V/div
time base = 5µS/div
→ 40kHz pulse
→ VOS 30V

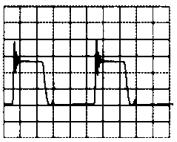

3. Mains in 40V AC
A = 50V/div
time base = 5µS/div
→ 40kHz pulse
→ VOS 80V

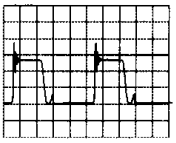

4. Mains in 65V AC
A = 50V/div
time base = 5µS/div
→ 40kHz pulse
→ VOS 140V

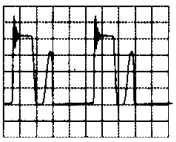

A more detailed fault finding tree for this power supply is given in the MD1 service manual and service informations. Note in this respect that the MD2 power supply is principally the same as the MD1 25-28" power supply (so not the same as the MD1 21" power supply).

6.5.3 *Fault finding in the line circuitry*

The HFB (test point L4 or between C2419 and C2420) together with PROT line (eg at connector 7L11) are very informative test points for possible line circuitry faults.
A good way of working is:

A. Check DDP (HDRIVE);
B. Check the HFB and the PROT lines in a normal set-up (220V mains and HDRIVE via DDP);
C. Second, in case the problem is in the line circuitry itself, the line circuitry can be simplified to a stand alone 'switched mode supply' at low voltages (low risk).

HFB and PROT measurements at start up in a normal set-up (220V mains and HDRIVE via DDP)

1. Connect a oscilloscope to the PROT signal (connector 7L11) and the HFB test point L4 (for a stable oscilloscope pattern, trigger the scope at the rising or falling edge of the PROT signal and apply a delay if needed).
2. In case of line problems normally the set is in protection. All test given below are done during the start-up phase, so the protection behaviour can be observed. After every new test, leave the set a few seconds enabling it to reset the protection.

Possibilities:

1. B = 5V/div PROT line at 7L11
A = 10V/div (35Vtt) HFB at test point L4
time base = 0.5S/div

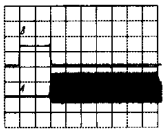

So 1000ms PROT high (8V), then HFB continuously
→ **Correct situation**
See paragraph 6.4.3

2. B = 5V/div PROT line at 7L11
A = 10V/div (35Vtt) HFB at test point L4
time base = 0.5S/div

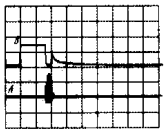

So 800ms PROT high (8V), then 200ms HFB
→ **Series Switch shorted**
Note: Amplitude OK (35Vtt), so line circuitry is OK. Directly after mains switch on after approx 800ms pulses appear for approx 200ms followed by protection.
See also paragraph 6.4.3; As the Series Switch is shorted, already after 800ms HFB pulses are present and the DDP will make the PROT line low. Because the PROT line is already low after 800ms, the set will switch into protection mode.

3. B = 5V/div PROT line at 7L11
A = 10V/div (35Vtt) HFB at test point L4
time base = 0.5S/div

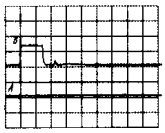

So 4 seconds PROT high (8V) and no HFB
→ * **Series Switch open or**
* **line transistor open or**
* **no HDRIVE**
See also paragraph 6.4.3; After 1000ms the processors tries to close the Series Switch, but this is defective (open) and so there will be no HFB pulses measured at the DDP. In that case the software will wait for another 3000ms for HFB pulses. If this pulses will not be there even after this 3000ms, the set will switch into protection.

4. HFB and PROT both at zero during start up.
Power supply is shorted, so power supply hiccup and has no output voltage.
→ **Series switch and VOS (eg line transistor TS7421 or both diodes D6421 and 6422) shorted.**

5. B = 5V/div PROT line at 7L11
A = 10V/div (35Vtt) HFB at test point L4
time base = 0.5S/div

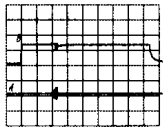

So 4 seconds PROT high (8V) and shortly a HFB
→ * **Series switch, line transistor and HDRIVE are OK**
* **No line deflection (eg horizontal deflection coil not connected or open)**
See also paragraph 6.4.3; After 1000ms the Series Switch is closed, but the HFB is not correct. The small oscillation at 32kHz made 'somewhere in the line' indicates that the Series Switch, the line transistor and the HDRIVE are OK.

6. Two phenomema's:
a No picture, no sound; after approx 5 seconds very shortly a horizontal line and then the set switches into protection
b B = 5V/div PROT line at 7L11
A = 10V/div (35Vtt) HFB at test point L4
time base = **1S/div**

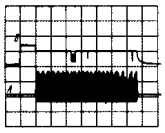

So in case of a horizontal line for a very short moment and in case for 1 second PROT high (8V) and no HFB and then for 7 seconds PROT high (5V) and HFB
→ **No frame deflection (eg frame deflection coil not connected)**
Start up procedure (1000ms PROT at 8V) is OK. After that the Series Switch is closed. In this case HFB pulses are normal present, but as the VFB pulses are not present (DDP generates error 70 V_FAIL) the PROT line becomes active driven by the DDP (for 7 seconds the PROT will be at 5V driven by the DDP).

7. Two phenomena's:
a Very bright picture with even whiter flyback lines. After approx 10 seconds set switches into protection
b B = 5V/div PROT line at 7L11
A = 10V/div (35Vtt) HFB at test point L4
time base = **2S/div**

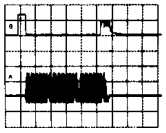

So very bright picture with even brighter flyback lines and 1 second PROT high (8V), approx 8 seconds PROT low and HFB pulses and then 1 seconds PROT high (5V) with HFB
→ * **No +200D heater voltage**
* **RGB amplifiers shorted**
Start up procedure (1000ms PROT at 8V) is OK. Approx 8 seconds after this start up procedure, the DDP will make the PROT high (5V) because the EHT-INFO is too high (DDP will generate error 71 Overcurrent). After 1 second PROT high the set will go to protection.

In case the line circuitry itself is defective

In case the line circuitry itself is defective, the line circuitry can be simplified to a stand alone 'switched mode supply' at low voltages (low risk) as follows:

1. Take out the mains connector;
2. Disconnect the SSP;
3. Connect an external 50V DC (or 40V DC) supply with current measurement possibility between the source (output side) of the Series Switch TS7470 and ground;
4. Replace the DDP HDRIVE by an external LF generator (TTL level, so between 0 and 5V and duty cycle 50%) with a 32kHz pulse at cathode of D6409 (near LOT at the side of the PCB);
5. Connect a oscilloscope to test point L1 (collector of line transistor TS7421).

Possibilities:

1. A = 50V/div test point L1 at collector line transistor
time base = 5µS/div
Current from external DC supply approx 100mA
So normal 32kHz pulses and 100mA supply current
→ **Correct line circuitry**
Amplitude of the signal is strongly depending on the frequency of the generator

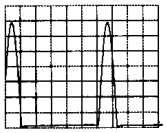

2. A = 50V/div test point L1 at collector line transistor
time base = 5µS/div
Current from external DC supply approx 100mA
So lower pulses followed by long pulses and 100mA supply current
→ **Line deflection open, so eg:**
   * **line deflection coil open**
   * **linearity coil L5421 open**
   * **S-correction C2432 open**

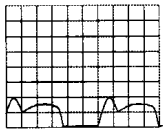

3. A = 50V/div test point L1 at collector line transistor
time base = 5µS/div
Current from external DC supply approx 500mA !!
So fast oscillations and 500mA supply current
→ **Line deflection shorted (eg line deflection coil shorted)**
In case the line deflection is not completely shorted, but only a number of windings are shorted, the oscillogram is there without the oscillation and a current of the external DC supply of approx 200mA.

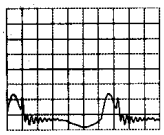

4. A = 100V/div test point L1 at collector line transistor
time base = 5µS/div
Current from external DC supply approx 150mA
So flyback time is shorter, one extra pulses in between, 150mA supply current
→ **Flyback C2425 open**

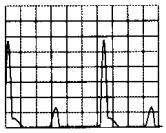

5. A = 100V/div test point L1 at collector line transistor
time base = 5µS/div
Current from external DC supply > 1A
So 2 pulses per cycle extra and supply current from more than 1A
→ **Short in picture tube (eg EHT to aquadag)**

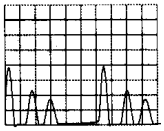

6.5.4 Fault finding in the sync part (see also fault finding tree)

1. Antenna out and TXT/OSD-menu is stable (OK)
   * DDP and line seems to be OK
   * Probably synchronisation problem in the video processor (HA, VA) or Feature Box (HD, VD)
2. Antenna out and TXT/OSD-menu is not stable (scrolls)
   * No synchronisation at all, so DDP or line problem

6.5.5 Fault finding no picture and no protection LED → problem in the video controller (TDA4780) part

In case there is no picture and no protection, most likely there is a problem with the BC_INFO (TDA4780 or RGB amplifiers or picture tube).

Normal start up procedure:
Connect a video generator (eg PM5518) with a white pattern to the tuner and trigger the oscilloscope field frequent (a more stable picture is obtained if triggered at VD of the Feature Box; pin 6 S48).

1. First phase of start up; 4 white measuring lines (lines 15, 16, 17, 18) and the main picture is muted (these oscillograms are best visible if the picture tube is cold);

Red and green (or blue) gun
100V/div DC
50µs/div
4 measuring lines white

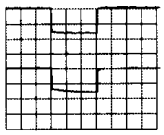

Total beam current is measured and feedback to pin 19 TDA4780.
The TDA4780 checks whether the voltage at pin 19 TDA4780 (IC7500) is ≥ 4V5 (during these lines)
Yes → go to phase 2
No → remain in phase 1

2. Second phase of start up; each beam separately is measured and the main picture is still muted. Line 15 is Red, line 16 is Green and line 17 is Blue. By now BC_INFO is measured:
   * Differences are compensated
   * If differences are minimal then go to phase 3

Red (line 15) and green (line 16) gun
50V/div AC
50µs/div

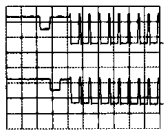

Red (line 15) and blue (line 17) gun
50V/div AC
50µs/div

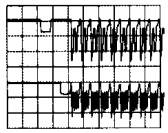

Faultfinding and Repair tips

3. After start up the picture is present and differences in cut-off points of the R, the G and the B gun are compensated continuously

Repair procedure

In case of no picture and no error codes
- Switch on the set
- In a 4x3 set, press compress (16:9)
- In a 16x9 set, shift down the picture

Now you can see in which start up phase the set is:

1. **A bright white line** (first phase of start up procedure)
   → there is a monitor pulse, so the TDA4780 + picture tube + RGB amplifiers are OK
   → there must be 4V5 feedback at pin 19 TDA4780
   → If no 4V5 fault in feedback loop

2. **Small R and G and B lines**
   (second phase of start up procedure)

   TDA4780 is OK

   Probably one gun of the picture tube is bad
   → Measure at pin 19 TDA4780 which feedback line (the R or G or B line) is less; the corresponding gun is wrong (amplifier or gun)

3. **No lines visible**
   Measure pin 19 TDA4780

-	0V	Check TDA4780 (sandcastle and the supply voltage)
-	5V	Check RGB amplifiers Short pin 19 TDA4780, now there will be measuring lines (at continious 5V phase 1 and 2 are bypassed)
-	Pulses	there is a measure line, so the TDA4780 is OK Measure on cathode on the CRT panel if the measure lines are present: Yes → BC_INFO circuit is open or no HEATER voltage No → RGB amplifier problem

8. Electrical adjustments

General alignment conditions

All electrical adjustments/alignments should be made under the following conditions:

* Power supply voltage: 220-240V ± 10%; 50-60 Hz ± 5%.
* Warm-up time ≈ 10 minutes.
* Voltages and oscillograms are measured in relation to tuner earth (with exception to the voltages on the primary side of the power supply). **Never** use the cooling fins/plates as earth.
* Test probe: Ri > 10 MΩ; Ci ≤ 20 pF.

8.1 Large signal panel adjustments [A]

8.1.1 *+141V power supply voltage*

- Connect a voltmeter to the positive side of C2569.
- Using **R3559** adjust the power supply voltage to +141V ± 0V5.

8.1.2 *Focusing*

This is adjusted using the focus potentiometer (uppermost on the line transformer).

8.1.3 *Vg2 adjustment*

- Use the Service Alignment Menu to switch on the Vg2 test pattern (see paragraph 8.4).
- With the aid of a DC voltmeter (Ri > 1MΩ) measure the DC voltages on pins 8 of the RGB output amplifiers IC7330, IC7340 and IC7350 on the picture tube panel.
- Determine the highest of the three voltages using the Vg2 (SCREEN) potentiometer on the line output transformer and adjust it to 155V ± 2V.

8.1.4 *Horizontal centring (DC offset)*

- Use the Service Alignment Menu (see paragraph 8.94) to switch on the geometry test pattern and then select in sequence: Alignments, Geometry, Test pattern on, H-Shift.
- Use H-Shift to adjust the picture in such a manner that the test pattern appears in the middle of the picture tube (video centrallin in the deflection window).
- If the adjustment range of the H-Shift is insufficient, the deflection window can be moved using the jumpers on the DC-shift panel.
- If the DC-shift panel is used the video must then be placed in the middle of the deflection window again via H-Shift.

Remarks:
The 'Horizontal Shift' adjustment in the Service Alignment Menu **cannot** be adjusted using the internal test pattern. An external test pattern from a generator or an aerial is required for this purpose.

8.2 Small signal panel adjustments [K]

8.2.1 *Y/CVBS level*

- Feed in a CVBS grey scale signal with a nominal amplitude (between black and white) to pin 20 of EXT1 and select the picture on EXT1.
- Use **R3503** on the SSP to adjust the amplitude of the signal to 345mV$_{pp}$ (between black and white) on pin 8 of IC7500 (TDA4780) on the SSP (K).

8.3 TXT + control module [J3] adjustments

8.3.1 *24 MHZ crystal for Text DualScreen*

- Select a programme using teletext.
- Activate the Text DualScreen mode.
- Adjust **L5465** so that the teletext half is stable on the screen and when turning to both the left and right some margin remains.

8.4 IF module adjustments [L]

8.4.1 *AGC (Automatic Gain Control) take-over point adjustment*

Rough adjustment:
- In case the picture from a local transmitter is distorted, adjust the AGC using **R3140** until the picture is no longer distorted.

Fine adjustment:
- Connect a video generator (e.g. PM5518) to the aerial input.
- Select a 475.25 MHz colour bar without sound.
- Set the video generator to its highest level.
- Select the Service Default Mode by means of the <DEFAULT> key on the DST or by briefly shorting the SERVICE DEFAULT MODE pins.
- Connect an oscilloscope to the output of the tuner (pin 17).
- Adjust the AGC take over point using **R3140** so that the oscilloscope indicates 0.5V$_{pp}$.

8.4.2 *AFC (Automatic Frequency Control) adjustment*

- Select 'MANUAL' adjustment in the installation menu.
- Select a transmitter frequency of 175.25 MHz (upper left on the screen) by means of the digit keys and the PROGRAM +/- keys. Once the frequency has been accurately adjusted using PROGRAM +/-, the set is forced to that frequency and the AFC adjustment is switched off.
- Connect a video generator with a colour bar and a frequency of 175.25 MHz to the aerial input.
- In a 'Multi West Europe' set (-/12) select system BG on the video generator and system 'WEST-EUROPE' in the installation menu.
- In a 'Multi French' set (-/05/19) select system L on the video generator and system 'FRANCE' in the installation menu.
- In a 'Multi East Europe' set (-/58) select system DK on the video generator and system 'EAST-EUROPE' in the installation menu.
- Connect a multimeter to the AFC output on pin 12S59.
- Use **L5165** to adjust the AFC to 2V6.

8.4.3 34.4 MHz adjustment for 'Multi West Europe' (BGLM -/12) and 'Multi East Europe' (BGLMDK -/58) sets

- Select a program with system 'AMERICA' or go to the installation menu and make a program with system 'AMERICA'.
- Connect a video generator to the aerial input.
- Select system NTSC M with 1kHz sound and a fully black picture.
- Connect an oscilloscope to connector 10S59 (CVBS_TERR) and trigger line-frequent.
- Adjust the 34.4 MHz filter using **L5101** so that the sound carrier wave at 34.4 receives maximum suppression (minimum amplitude of the oscillation).

8.4.4 40.4 MHz adjustment for Multi France sets (BGLL'I -/05/19)

- Select a program with system 'FRANCE', but <u>not</u> a program in the VHF1 band (so select a SECAM L transmitter).
- Connect a video generator to the aerial input.
- Select system SECAM L with 1kHz sound and a completely black picture.
- Connect an oscilloscope to connector 10S59 (CVBS_TERR) and trigger line-frequent.
- Turn the 40.4 MHz TOKO **L5102** fully to the right.
- Now turn the TOKO slowly to the left until:
  - ★ the amplitude of the subcarrier begins to increase, or
  - ★ peaks appear in top of the signal.

8.5 Audio Power Supply Module adjustments [AB]

8.5.1 +16V supply voltage

- Connect a voltmeter to the positive side of C2307.
- Switch off the load (mute the sound).
- Using **R3311** adjust the supply voltage to +16V5.

8.6 VDS adjustment (Video DualScreen) module [AC]

8.6.1 AGC (Automatic Gain Control) transfer point adjustment

Coarse adjustment:
- If the picture of a local transmitter is distorted, adjust the AGC using **R9H5** until the picture has no distortion.

Fine adjustment:
- Connect a video generator (e.g. PM5518) to the aerial input.
- Select a colour bar at 475.25 MHz without sound.
- Drive the video generator to full power.
- Select the Service Default Mode using the <DEFAULT> key on the DST or by briefly short-circuiting the SERVICE DEFAULT MODE pins.
- Select VDS mode and select on the right-hand screen the same programme as on the left-hand screen.
- Connect an oscilloscope to the tuner output (pin 17).
- Using **R9H5** adjust the AGC transfer point so that the oscilloscope reads $0.5V_{pp}$.

8.6.2 AFC (Automatic Frequency Control) adjustment

- Switch off the VDS mode and select 'MANUAL' tuning in the installation menu of the main screen.
- Select a transmitter frequency of 175.25 MHz (top left in the screen) using the digit keys and the PROGRAM +/- keys. As soon as the frequency is set accurately using the PROGRAM +/- the main and, as a result of this, the VDS tuner, are forced to that frequency and the AFC control is switched off.
- Save these settings and exit the installation menu.
- Connect a video generator with a colour bar and a frequency of 175.25 MHz to the aerial input.
- Select system BG on the video generator and system 'WESTERN EUROPE' in the installation menu.
- Select VDS mode and on the right-hand screen select the same programme as on the left-hand screen.
- Connect a multimeter to the AFC output on pin 23 of IC9R (IF modulator of the VDS modules).
- Using **L9F7** adjust the AFC to 2V6.

8.6.3 40.4 MHz adjustment for (BGLL'I)

- Select a programme with system 'FRANCE', however, not a programme in the VHF1 band (therefore select a SECAM L transmitter), for example 475.25 MHz.
- Connect a video generator to the aerial input and select system SECAM L with 1 kHz sound and a full black picture.
- Select VDS mode and on the right-hand screen select the same programme as on the left-hand screen.
- Connect an oscillioscope to connector pin 10 of IC9R (TUN_CVBS) and trigger line frequency.
- Turn the 40.4 MHz TOKO **L9F2** fully clockwise.
- Now turn the TOKO slowly anticlockwise until:
  - ★ the amplitude of the subcarrier starts to increase or
  - ★ peaks are created on the top of the signal.

8.7 Wireless Dolby transmitter and receiver adjustment [AE]

8.7.1 Maximum FM frequency sweep adjustment of the transmitter [AE1]

Fine adjustment with an FM frequency sweep meter:
- Connect a signal generator to the input of the transmitter (pin 1 or 3 of plug 1409).
- Select 1 kHz 600 mV top-top signal.
- Using an FM frequency sweep meter measure the aerial output of the transmitter.
- Using **R3442** adjust so that the FM frequency sweep is 75 kHz.

Coarse adjustment without FM frequency sweep meter:
- Use the wireless Dolby transmitter and receiver.
- Select the same channel for both.
- Connect a signal generator to the input of the transmitter (pin 1 or 3 of plug 1409).
- Select a 1 kHz 600 mV top-top signal.
- Connect a multimeter to pin 2 of plug 1792 on the receiver module.
- Adjust **R3442** on the transmitter to 280 mV top-top on the receiver.

Electrical adjustments

8.7.2 FM detector adjustment of the receiver [AE3]

Fine adjustment with a signal generator with FM frequency sweep control:
- Connect a signal generator to the input of the receiver 1710
- Select a 433.750 MHz signal with 1 mV top-top and a FM frequency sweep of 75 kHz
- Connect an oscilloscope to the anode of C2772 (T716)
- Adjust **L5710** to minimal distortion

Coarse adjustment with a pattern generator:
- Use the wireless Dolby transmitter and receiver
- Select the same channel for both.
- Connect a signal generator to the input of the transmitter (pin 1 or 3 of plug 1409).
- Select 1 kHz signal.
- Adjust **L5710** to minimal distortion.

8.7.3 Pilot tone adjustment of the receiver [AE3]

Fine adjustment with a signal generator:
- Connect a signal generator to the input of the receiver 1710.
- Select a 433.750 MHz signal with 1 mV top-top without FM frequency sweep.
- Connect an oscilloscope or a frequency counter to the test point T731 close to pin 13 of IC7710.
- Adjust **R3721** to 76 kHz.

Coarse adjustment with pattern generator:
- Use the wireless Dolby transmitter and receiver.
- Select the same channel for both.
- Connect a signal generator to the input of the transmitter (pin 1 or 3 of plug 1409).
- Select a 1 kHz signal.
- Adjust **R3721** to the centre of the range in which the receiver clicks on (stereo indication on pin 7 of IC7710 becomes active (low)).

8.8 VGA module adjustment [AF]

8.8.1 Two methods:

- With a video card for which the horizontal frequency is adjustable. Adjust **R3162** such that when the horizontal frequency is above 33.1 kHz, the SVGA detection on the OSD becomes active (32KHZ_DETECT then also becomes 'high').
- Using a signal generator (e.g. PM5326) apply a pulse with a low duty-cycle to the H(PLL) input pin 4 of IC7160 and adjust the frequency to 33.1 kHz. Adjust **R3162** such that at a horizontal frequency above 33.1 kHz, the SVGA detection on the OSD becomes active (32KHZ_DETECT then becomes 'high').

8.9 Adjustments in the Service Alignment Menu; General

Switch on by:
- briefly shorting the service pins 'SERVICE ALIGNMENT MODE' on the SSP;

or:
- pressing the <ALIGN> key on the Dealer Service Tool (DST) (RC7150), followed by keying in the password 3140 and then pressing the <OK> key.

The Service Menu will now appear on the screen.
The following information is now displayed:
1. The software date ('Date') and version ('ID.') of the ROM.
2. The accumulated total of operation hours ('Operation Hours').
3. The contents of the error buffer ('Errors') (the most recent error displayed at the upper left, immediately following 'ERRORS'; see chapter 6.3).
4. The module generating the error ('Defect. Module') (if there are multiple errors in the buffer that have not all been generated by a single module, there is probably another defect. The message 'INDETERMINATE' will then be displayed here).
5. Menu item 'Reset Error Buffer'. The error buffer can be reset by pressing the <OK> key.
   Menu item 'Functional Test'. All devices are tested via the <OK> key. Eventual errors are displayed in the error buffer (the error buffer is not erased; the contents return when the Functional Test is terminated).
7. Menu item 'Alignments'. This enables the Alignments sub-menu to be called up.
   The following alignments can be selected:

   'General':
   Adjustment of 'White Drive', 'Cut-off', 'Vg2 test Pattern', 'Peak White Limiter','PIP brightness'.

   'Normal Geometry':
   General geometry adjustments.

   'Super wide geometry':
   Geometry adjustments for the 'Panorama' position in 16:9 sets.

   'Options':
   Setting the initialisation codes in the set via text.

   'Option number':
   All options together, expressed in two long numbers. The original factory setting for these numbers can be found on the picture tube sticker on the inside of the set.

   'Store':
   Store all adjustments.

The adjustments
General:
- ★ Once all alignments/adjustments have been completed the item 'STORE' must be selected to record all the values in permanent memory.
- ★ When the option codes have been changed and stored the set has to be switched on and off using the mains switch to activate the new settings (when switching on and off via stand-by, the option code settings are NOT read by the microprocessor).
- ★ If an empty EAROM (permanent memory) is detected, all settings are set to pre-programmed standard values.
- ★ A built-in test pattern can be called up in various sub-menus. The test pattern generator can be switched on using the item 'TESTPATTERN ON/OFF'. The test pattern only appears AFTER the specific alignment/adjustment has been selected.
  The test patterns are generated by the teletext module.

Electrical adjustments

8.10 Picture tube adjustments in the Service Alignment Menu

8.10.1 'White Drive'

- For the first adjustment turn off DNR and 'Contrast Plus'.
- Use the internal test pattern (a white picture). Adjust the white level for the three settings 'WARM', 'NORMAL' and 'COOL'.
- Start in the 'NORMAL' position and take the standard values for green, red and blue as a starting point (value 50) and then adjust red and blue.

The following default values are maintained for the 'white drive' settings:

	Cool	Normal	Warm
R	41	42	45
G	37	36	35
B	30	25	19

8.10.2 'Cut-off'

- Before adjusting turn off DNR and 'Contrast Plus', set brightness to step 37 (Brightness:) and the contrast setting to maximum.
- Use the internal test pattern (a black picture).

The following default values are maintained for the 'cut-off' settings:

	Cool	Normal	Warm
R	25	30	40
G	24	28	34
B	31	25	20

If the adjustment is (much) too low the set may start flashing.

8.10.3 'Peak White Limiter'

For all of the above mentioned picture tubes a default value of 28 can be maintained for the 'Peak White Limiter'.

8.11 Small signal adjustments in the Service Alignment Menu

PIP brightness
Adjust 'PIP brightness' in such a manner that the brightness of the PIP picture is the same as the brightness of the main picture.

8.12 Geometry adjustments 'Normal Geometry' in the Service Alignment Menu

8.12.1 Vertical amplitude and centring

Select 'Test Pattern on'.

a. Adjust the vertical amplitude using 'V amplitude' so that the test pattern is fully visible.
b. Adjust the vertical centring using 'V shift' so that the test pattern is located vertically in the middle.

Repeat the adjustment of 'V amplitude'.

8.12.2 Vertical linearity

Select 'Test pattern on'.
Adjust the vertical linearity using 'V linearity' so that the top and bottom of the picture has equal amplitude.

8.12.3 Vertical S correction

Select 'Test pattern on'.
Adjust the vertical S correction using 'V S-correction' so that the vertical amplitude at the top of the picture is equal to the amplitude in the middle of the picture.

8.12.4 Horizontal centring and amplitude

Select 'Test pattern on'.

a. Using 'H amplitude' adjust the horizontal amplitude so that the entire test pattern is visible.
b. Feed in an external test signal.
   Use 'H shift' to adjust the picture horizontally in the middle.

Repeat the 'H amplitude' adjustment if necessary.

8.12.5 East/west adjustment

Select 'Test pattern on'.

a. Use 'East/West parabola' to adjust the vertical lines until straight.
b. Use 'East/West corner' to adjust the vertical lines in the corners until straight.
c. Use 'East/West Trapezium' to adjust the picture until rectangular.
d. If necessary select 'East/West Top compensation' and adjust as required.

Repeat steps 8.12.5a to 8.12.5c if necessary.

8.13 Geometry adjustments 'Super wide geometry' in the Service Alignment Menu

Only applicable to 16:9 sets

8.13.1 Vertical amplitude and centring

Select 'Test Pattern on'.

a. Adjust the vertical amplitude using 'V amplitude' so that the entire test pattern is visible.
b. Adjust the vertical centring using 'V shift' so that the test pattern is positioned vertically in the middle.

Repeat the adjustment of 'V amplitude'.

8.13.2 Horizontal amplitude

Select 'Test pattern on'.
Use 'H amplitude' to adjust the horizontal amplitude so that the entire test pattern is visible.

8.13.3 Vertical S correction

Select 'Test pattern on'.
Adjust the S correction using 'V S-correction' so that the vertical amplitude at the top of the picture is equal to the amplitude in the middle of the picture.

8.13.4 East/west parabola

Select 'Test pattern on'.
Use 'East/West parabola' to adjust the vertical lines until they are straight.

8.13.5 Horizontal centring and amplitude

Feed in an external test signal.
Use 'H shift' to adjust the picture horizontally in the middle.

8.14 Luminance delay

A new adjustment has been introduced with the introduction of the TDA9143 (and TDA9144 in GFL). In the 'GENERAL' menu of the 'ALIGNMENTS' menu the item 'Luminance delays' has been added. These 'Luminance delays' adjustment can only be selected if the set is fitted with a TDA9143 (or TDA9144 in GFL).
If 'Luminance delays' is selected, the following sub-menu appears:
- Luminance Delay Pal
- Luminance Delay Secam
- Luminance Delay Bypass

With the 'Luminance delay' adjustments the luminance information is placed on the chrominance information (brightness is pushed onto the colour).
- The Pal adjustment is only active with Pal signals and must therefore also be adjusted with the Pal signals.
- The SECAM adjustment is only active with SECAM signals and must therefore also be adjusted with the SECAM signals.
- The BYPASS adjustment is only active with NTSC signals, whereby the COMB filter is switched on, and with Palplus signals. Therefore, this adjustment can also only be performed for these signals (if the adjustment for Palplus signals is correct, then this also is automatically good for NTSC signals with COMB filter and vice versa).

As with all other adjustments, here the modified adjustment is only stored after the 'STORE' command.

8.15 Adjustment on the PIP panel in the Service Alignment Menu

PIP AGC adjustment
The AGC adjustment prevents overdriving of the PIP-tuner if the aerial signal is too strong. Overdriving is visible as a loss of colour and synchronisation in the PIP picture. Amplification has to be adjusted to minimum level, but the PIP-picture should be as free of noise as possible.
At maximum amplification **R3912** is turned fully left, at minimum amplification **R3912** is turned fully right.

Adjustment:
- Apply a (strong) aerial signal of 4mV (72dBmV).
- Turn R3912 fully to the right (minimum amplification). Turn R3912 slowly to the left until the noise in the PIP-picture no longer decreases.
- If an aerial signal is not available, compromise by adjusting R3912 to 30% of its total travel (100% is maximum amplification, fully left).

8.16 Option menu

Introduction
The microprocessor communicates with a large number of IC's in the set. To ensure good communication and make digital diagnosis possible, the microprocessor has to know which IC's have to be addressed. The presence of specific IC's or functions is made known by means of the option codes. Only correct option code settings will ensure a correctly functioning set and signalling of the correct error message in case of a defect.
The options have been divided into different groups. These groups contain the various options for which multiple choices are usually possible.

Just as in the beginning of GFL all options which are contained in the set can be manipulated in the MD2.2 Service Alignment Mode using both the option numbers and the OPTION menu.
- All hardware related options are incorporated under the heading 'Options' of the 'Alignments' sub-menu of the 'Service Alignment Mode'.
- All software related options are incorporated under the heading 'Dealer Options' of the 'Service Alignment Mode", but can also be reached directly via the 'DEALER' knob of the DST.

8.16.1 Options in the Service Alignment Mode

Menu name	Subjects	Options	Physically in the set
TV Systems	IF Type	Multi West Europe Multi France Multi East Europe Multi Global BG-only	BGLM set; IF module with L5101 (without junper 4111) (diagram L) BGLL'I set; IF module with L5102 (diagram L) BGLMDK set; IF module with L5101 and jumper 4111 (diagram L) This IF-module is not planned only BG set; IF module without TS7120, 7121, 7123 and 7122 (diagram L)
Stereo Decoder	NICAM	Yes No	Audio IC7353 on Audio Module is MSP3410 (diagram O / P / P2) Audio IC7353 on Audio Module is MSP3400 (diagram O / P / P2)
PIP	PIP Available	Yes No	PIP module present (diagram S) PIP module not present (diagram S)
	PIP Tuner	Yes No	Second tuner PIP U1775 on PIP panel present (diagram S) Second tuner PIP U1775 on PIP panel not present (diagram S)
Teletext	TXT	not available 128 KB 512 KB 1 Mb	no teletext IC7490 is a 128kB (100 pages) teletext memory (code '256' in DRAM typenumber) IC7490 is a 512kB (400 pages) teletext memory (code '400' in DRAM typenumber) IC7490 is a 1MB (800 pages) teletext memory (2 code '400' DRAM's needed which is not possible in MD2.2)
	Level 2.5	Yes No	Level 2.5 TXT (only software related; in MD2.2 always level 2.5 software) Level 1.5 TXT
Communication	Easylink	Yes No	Project 50 (easylink) set No project 50 (easylink) set
Picture tube	CRT Type	4:3 16:9	4:3 picture tube 16:9 picture tube
	Picture Rotation	Yes No	Frame rotation circuitry present (IC7050 diagram G) Frame rotation circuitry not present (IC7050 diagram G)
Video Repro 1	Frame	50/60 Hz 100/120Hz Digital Scan Natural Motion	No Feature Box present Eco Feature Box present (diagram M1) Feature Box 3 present (digital scan) (diagram M1) Feature Box 4 present (digital scan and natural motion with MELZONIC IC7447) (diagram M2)
	Dynamic Contrast	Yes No	SMARTIC IC7008 on the AI module present (diagram N) SMARTIC IC7008 on the AI module not present (diagram N)
	Digital Panorama	Yes No	PANIC IC7010 on the AI module present (diagram N) PANIC IC7010 on the AI module not present (diagram N)
	Auto Format FBX (AARA)	Yes No	Only in 16:9 sets with PANIC IC7010 and SMARTIC IC7008 present on the AI module (diagram N) All other configurations
	Auto DNR	Yes No	LIMERIC IC7006 on the AI module present (diagram N) LIMERIC IC7006 on the AI module not present (diagram N)
	PALplus	Yes No	PALplus panel is present (diagram N2) PALplus panel is not present (diagram N2)
Video Repro 2	Combfilter	Yes No	Comb filter present (diagram Q) Comb filter not present (diagram Q)
	Lum. Trans. Improv.	Yes No	IC7508 TDA9177 present (diagram K) IC7508 TDA9177 not present (diagram K)
	Macrovision Prot.	Yes No	IC7352 is TDA9143 / TDA9144 (diagram K) IC7352 is TDA9141 (diagram K)
	Wide Screen Sign.	Yes No	Wide screen signalling bits for automatic 16/9 selection is enabled (only software) Wide screen signalling bits for automatic 16/9 selection is disabled (only software)
	TXT/EPG DualScreen	Yes No	IC7461, IC7462 and IC7463 present on the TXT+control module (diagram J) IC7461, IC7462 and IC7463 not present on the TXT+control module (diagram J)

9. Ciruit description

Power supply

9.1 Audio power supply

9.1.1 Introduction

In a Dolby set with a sound power of 4 x 15W the power supply of the large signal can deliver insufficient power. Therefore a separate power supply is selected for the sound (+16V and -16V). The so-called 'Audio power supply' is a derived version of the SOPS (Self Oscillating Power Supply) from the FL1-PTV an can supply up to 100W at maximum power.
This SOPS is a mains isolated power supply and the feedback takes place by means of an opto-coupler. Part of the +16V is branched off via potentiometer R3311.
This voltage drives the pulse width controller, which switches on TS7305 and the diode of the opto-coupler earlier or later. This photodiode drives the phototransistor of the opto-coupler in turn, as a result of which switching transistor TS7302 is switched off earlier or later via TS7310 and TS7311.
Since this power supply is a SOPS, it has no fixed operating frequency. The nominal operating frequency is 60 Hz.
The maximum frequency (at Uin = 264V AC and min. load) is 75 kHz. The minimum frequency (at Uin = 198V AC and max. load) is 45 kHz.
The stabilization is achieved by controlling the pulse width. In standby the power supply is adjusted back to 0V. The power supply is resistant to short-circuit and contains an over-voltage protection.

- *Switching transistor conducts, energy in the transformer*
  When the switching transistor conducts energy is stored in the transformer. The moment that the switching transistor stops conducting is determined by the pulse width controller which monitors the +16V output voltage and the +300V input voltage.
- *Switching transistor reverses, energy from the transformer to the load*
  As soon as the switching transformer reverses, the energy which is in the transformer is transferred to the load. As soon as all of the energy which was in the transformer has been siphoned to the load, the switching transistor starts to conduct again automatically via decay (see self-oscillation).

9.1.2 Pulses on transformer T5305 in normal operation (Fig. 9.1)

As long as the switching transistor is closed, energy is stored in the primary winding 5-1 and supplied to the measuring coupling 8-7:

* As a result of the switching of switching transistor TS7302, pulses with a peak of 900V are induced on pin 5 of the primary winding. This winding is used to store energy in the transformer.
* The positive voltage on pin 8 (+12V) is used as the measuring coupling voltage. This voltage is used to make switching transistor TS7302 conduct extra fast (due to the direction of D6307, winding 8-7 is the only winding which carries current so long as energy is stored in the transformer).

At the moment that switching transistor TS7302 is opened, the energy which is in the transformer is syphoned to the load:

- On the primary side:
  * The winding 9-7 is in phase with the feeding primary winding 5-1. The positive pulse on pin 8 acts as a type of protection which ensures that the switching transistor is unable to conduct as long as there is a high) positive voltage present on pin 5.
- On the secondary side:
  * The positive pulses on pin 22 are rectified and smoothed in order to create the +16V supply voltage.
  * The negative pulses on pin 12 are rectified and smoothed in order to create the -16V supply voltage.
  * The positive pulses on pin 20 are rectified and smoothed in order to create the power supply for the opto-coupler.
  * The negative pulses on pin 14 are used to charge C2312 negatively. This negative voltage on C2312 is used to drive the pulse width controller.

9.1.3 Starting up the power supply during the first 50Hz cycle (Fig. 9.2)

When the first positive half power supply pulse (50 Hz) 'arrives' then via the starting circuit (R3301, R3302, R3306 and L5302) a positive voltage arrives on the base of switching transistor TS7302. As a result of this TS7302 starts to conduct and causes a linear increasing current through primary winding 5-1 of the transformer. This causes the voltage on pin 5 of the transformer to drop and the voltage over the primary winding 5-1 to increase.
Because the voltage over winding 5-1 increases, the voltage over the measuring coupling winding 8-7 also increases causing the voltage on pin 8 to also increase (pin 7 is kept at a constant -5V; see -5V generation). As a result of this an additional starting current is fed back, from pin 8 via C2304 and R3329, with the starting current through R3301 (avalanche effect). This additional starting current runs via 2 routes:

- For rapid changes - in other words during start up - C2304 forms a short-circuit. Therefore the current path C2304, R3329 provides a *short, strong* additional current pulse.
- At the same time a linear increasing positive feedback current flows through D6307 as a consequence of L5303. As a result of this, switching transistor TS7302 conducts more and the voltage on pin 5 drops even faster until the switching transistor is saturated. This current path therefore *maintains* the additional current pulse up to the first self-oscillation (see the description for self-oscillation).

In the event of any breakdown of TS7302 between C and B, the base voltage is limited to 1V8 by means of D6324, D6325 and D6336. As a result of this the transistors on the primary side of the control loop (TS7304, TS7310, TS7311 and TS7315) are protected.

Menu name	Subjects	Options	Physically in the set
Personal	Blue Mute	Yes No	Blue mute active in case of no picture detected Noise in case of no picture detected
	Favourite Programmes	Yes No	Favourite program selection enabled Favourite program selection disabled
	Virgin Mode	Yes No	TV starts up once with language selection menu after mains switch on for the first time (virgin mode) TV does not start up once with language selection menu after mains switch on for the first time (virgin mode)
	Standby Toggle	Yes No	Standby toggle activated; by the standby knob the TV is switched to standby and back to normal operation again Standby toggle de-activated
	Auto Store Mode	none PDC-VPS TXT page PDC-VPS-TXT	Autostore mode disabled (not in installation menu) Autostore mode via ATS (PDC/VPS) enabled Autostore mode via ACI enabled Autostore mode via ACI or ATS enabled
	Multipip	Yes No	Multi-PIP enabled Multi-PIP disabled
	Demo Mode Enable	Yes No	Demo mode enable Demo mode disable
	Auto Format Enable	Yes No	Automatic Aspect Ratio detection (black bar detection) software is enabled Automatic Aspect Ratio detection (black bar detection) software is disabled
	Auto Sharpness Enable	Yes No	Automatic sharpness software is enabled (motion compensation depending on noise level) Automatic sharpness software is disabled
	Auto Motion Enable	Yes No	Auto motion software is enabled (smart keys coupled to nexTView) Auto motion software is disabled
	Auto Smart Control	Yes No	Auto smart control software is enabled Auto smart control software is disabled
	Menu animations	Yes No	Animations at start of menu is enabled Animations at start of menu is disabled
Teletext	Cont. Subtitles	Yes No	Continious subtitles enabled Continious subtitles disabled
	TXT Preference	top flof	Preference to top teletext Preference to flof teletext
	Infoline	Yes No	PDC infoline enabled PDC infoline disabled
	East/West Txt	East West	TXT characters for non -/58 set TXT characters for -/58 set

- If an option selection in the Dealer Mode is not displayed, then that is the result of an option selection in the Service Alignment Mode.
- After the option(s) have been changed, they must be stored via the STORE command.
- The new option is only active after the TV is switched off and then back on again using the mains switch (the NVM is then read out again).

8.17 'Option number'

In case the EAROM has to be replaced, all the options will also require resetting. To be certain that the factory settings are reproduced exactly, both option numbers have to be set. These numbers can be found on a sticker on the picture tube.

Menu name	Subjects	Options	Physically in the set
	Video DualScreen	Yes No	Video DualScreen panel present (diagram AC) Video DualScreen panel not present (diagram AC)
Source Selection	SS Type	Euro MD2	Always in MD2
	Euro AV3	Yes No	3rd EURO connector present (diagram K) No 3rd EURO connector present (diagram K)
Audio Repro	Audio Repro	Basic Incr. sound Dolby + eq.	No dolby, no incredible sound, no graphic equalizer (Audio Module no dolby, no incr; diagram O) No dolby, yes incredible sound, no graphic equalizer (Audio Module no dolby with incred; diagram O) Dolby and so also graphic equalizer (Dolby Audio Module; diagram P / P2)
	Cordless Dolby	Yes No	Cordless dolby transmitter module present (diagram AE) Cordless dolby transmitter module not present (diagram AE)
	Dolby Signalling	Yes No	Automatic switching to dolby controlled by broadcaster is present (only software) Automatic switching to dolby controlled by broadcaster is not present (only software)
Miscellaneous	El. Program Guide	Yes No	IC7204 (flash memory) present on TXT+control module (diagram J) IC7204 (flash memory) not present on TXT+control module (diagram J)
	VGA	Yes No	VGA module present (diagram AF) VGA module not present (diagram AF)
	Telephone link	Yes No	Telephone interface panel present (diagram AJ) Telephone interface panel not present (diagram AJ)
	Heatsink Present	Yes No	Heatsinks present on CRT+scavem panel (diagram E) Heatsinks not present on CRT+scavem panel (diagram E)
	Philips logo	Yes No	Philips logo in Virgin mode and Demo mode (only software) No philips logo in Virgin mode and Demo mode (only software)

- If an option selection in the Service Alignment Mode is displayed in black letters, then that is the result of a different option selection in the Service Alignment Mode.
- After the option(s) have been changed, they can be stored via the STORE command.
- The new option is only active after the TV is switched off and then back on again using the mains switch (the NVM is then read out again).

8.16.2 Options in the Dealer Mode

Menu name	Subjects	Options	Physically in the set
Picture	Sharpness in menu	Yes No	Sharpness in picture menu Sharpness not in picture menu
	Tint in menu	Yes No	Tint (normal warm cool) in picture menu Tint (normal warm cool) not in picture menu
	CTI	Yes No	CTI enabled CTI disabled
	Subtitle Squeeze	Yes No	Subtitle squeeze enabled (moves subtitles upwards in case they would fall of the screen) Subtitle squeeze disabled
	Digital Options	100 Hz Digital Scan Natural Motion Nat. Motion Demo Split Screen	Only 100Hz is possible Only 100Hz and Digital scan is possible 100Hz and Digital scan and Natural motion is possible Demo mode; active areas are coloured in a black and white picture Demo mode; lower part is digital scan + natural motion / upper part is only digital scan

Ciruit description

9.1.4 Through-starting via self-oscillation (from the 2nd 50Hz cycle up to take over by the control loop) (Fig. 9.2)

Self-oscillation takes place as long as the secondary voltages are still not too low in order to allow the control circuit to work (so that it can still not be adjusted back).

- Immediately after starting up a linear increasing current flows through primary winding 5-1 which can never be higher than hfe x Ib.
- At the moment that this point is reached the primary winding 5-1 will hold its voltage as a result of which the impedance of the primary coil will start to drop. As a result of this the voltage over primary winding 5-1 and over the positive feedback winding 8-7 drops. The positive feedback current, the base and, as a result of this, the collector current of switching transistor TS7302 also drop, resulting in this starting to reverse.
  As a result of this pin 8 of the positive feedback winding becomes negative. The base voltage of TS7302 drops, the collector voltage increases, the positive feedback winding and the base voltage become more negative as a result of which TS7302 reverses more quickly (once again an avalanche effect, but now in reverse).
- Now that TS7302 is reversed, all energy which was stored in the transformer is supplied to the load. Because the secondary flows want to and can continue to flow (secondary diodes are conducting), the voltages reverse over the secondary windings and as a result of this the voltages over the primary windings also reverse. As a result of this the capacity on pin 5 of the transformer can charge up C2305 to the peak value of 900V (300V + (Vsec x n)).
- At the moment that all energy has been transferred from the transformer to the load, a resonance takes place between the primary winding 5-1 and C2305.
- If, during the resonance, the voltage over the primary winding 5-1 becomes positive, the voltage on the positive feedback winding 8-7 will also become positive. As a result of this the switching transistor will again start to conduct. This results in the voltage on the positive feedback winding 8-7 becoming high and the switching transistor again starts to conduct.
- This process repeats itself as a result of which the secondary voltages are built up more and more until the control loop, which provides the stabilization of the SOPS, comes into operation (see pulse width controller).

N.B.:

- Self-oscillation can also take place if the control circuit is faulty.
- Disconnecting pin 5 of the opto-coupler IC7301 and then carefully increasing the mains voltage using the VARIAC can be handy for fault tracing. As a result of this the SOPS is forced to continue running in self-oscillating mode.

9.1.5 Building up and maintaining the -5V on pin 7 of the transformer (continuous process) (Fig. 9.2)

In order to be able to quickly switch off switching transistor TS7302 and thus avoid its dissipation, -5V is applied to the base of TS7302 when switching off. The stabilization of pin 7 of the transformer is explained here.

- When switching transistor TS7302 is conducting, pin 8 of the transformer has +12V. Because *68328 and D6327 now* start to conduct, energy can be passed on from the source to the load. The output voltage over R3305 is stabilized exactly at -5V by the Zener -(5V6-0V6) via the 5V6 Zener and D6328 and the 0V6 of the BE of TS7300. R3343 and R3337 limit the current through transistor TS7300.
- During the reversal of switching transistor TS7302 the voltage on pin 8 of the transformer drops to -36V. D6327 and D6326 reverse and energy is no longer delivered to the load.

9.1.6 Stopping switching transistor TS7302 from conducting (Fig. 9.3)

The amount of energy which has to be pumped into the transformer has to be determined by the amount of energy which the load requires. In order to control this the pulse width controller on the secondary side makes the photo-diode in the opto-coupler conduct at just the right moment, as a result of which the switching transistor is ultimately reversed. This works as follows:
If the photo-diode on the secondary side starts to conduct, the photo-transistor on the primary side of the opto-coupler also conducts. As a result of this TS7310 starts to conduct, causing TS7311 to conduct. As a result of this the base of switching transistor TS7302 becomes connected to -5V via L5302 and R3306. A short and simultaneously very strong negative base current then flows as a result of which TS7302 reverses quickly and dissipates as little as possible. The quick 'drawing empty' of a transistor with a negative base current is called 'hollowing'.
During the reversal of switching transformer TS7302 there is a positive pulse on pin 5 and, due to this, also on pin 9 of the transformer. During this positive pulse TS7304 conducts as a result of which it is ensured that TS7310 and thus TS7311 also remain conducting. As a result of this TS7302 definitely remains in reverse when the high voltage is present on its collector.
Diodes D6305 and D6333 serve to protect transistors TS7304 and the opto-coupler.

9.1.7 Pulse width controller (Fig. 9.3)

Switching transistor reversed, energy to the load
As long as switching transistor TS7302 is reversed there is a negative pulse on pin 12 and pin 14 of the transformer.
The negative pulse on pin 14 charges C2312 negatively via D6315 and R3317 *(negative charging current I_A)*. As a result of this TS7305 reverses and no current flows through the diode of the opto-coupler. The secondary windings now deliver energy to the load.

Switching transistor conducts, energy in the transformer
As soon as all energy has been passed from the transformer to the load (secondary flow then becomes zero) the polarity of the voltages on the transformer reverses (see self-oscillation). Switching transistor TS7302 now starts to conduct and on pins 12 and 14 of the transformer there is now a positive voltage and on pin 22 a constant negative voltage.

Two current routes are created:
- Because pin 12 of the transformer is positive, D6313 and D6314 conduct and C2312 is charged up positively from its negative voltage (*positive charging current I_B*).
- The +16V output voltage is measured directly via TS7303. Because the voltage on pin 22 is now negative D6318 does not conduct as a result of which the base of TS7303 forms a direct reflection of the +16V output voltage via R3310, R3311 and R3312. For example, with an increase of the +16V the base will increase less than the emitter of TS7303, as a result of which TS7303 conducts more and thus generates a larger current (*positive charging current I_C*). Therefore, using R3311 the output voltage can be adjusted to +16V (so long as the switching transistor TS7302 reverses, pin 22 of the transformer is positive, D6318 conducts and the base of TS7303 lifts. Therefore this control only works as long as switching transistor TS7303 is conducting).

These two positive charging currents charge C2312 positively. As soon as the voltage on the base of TS7305 becomes higher than 1V2 TS7305, starts to conduct. The diodes and, due to these, the photo-transistor of the opto-coupler, conduct, as a result of which switching transistor TS7302 starts to reverse.

Load increase
With increasing load, the +17V and the -17V drop:
- Because the +17V wants to drop the base of TS7303 will want to drop by approximately half with regard to the drop of the emitter of TS7303. As a result of this TS7303 is driven less open, resulting in the *positive charging current I_C* decreasing.
- Because the negative pulse of pin 14 decreases when the output voltages are dropping, the *negative charging current I_A* will also decrease. However, due to the TS7303 control the power supply is correct immediately, as a result of which more energy is pumped into the transformer. As a result of this pin 14 again becomes more negative, causing the *negative charging current I_A* to increase again.
- The *positive charging current I_B* will remain constant because that is only related to the level of the primary voltage 300V (see mains voltage variations).

Due to the increased negative charging current I_A, C2312 becomes charged up more negatively and due to the decreased positive charging current I_C, C2312 will be charged up less quickly. Due to these two mechanisms it takes longer before C2312 reaches the 1V2, as a result of which TS7305 is switched later. As a result of this the switching transistor is switched off later and more energy is pumped into the transformer. As a result of this the load increase is compensated.

Mains voltage variations
When the mains voltage becomes lower, the positive voltage on pin 12 also becomes lower (thus lower than 10V). As a result of this the positive charging current I_B becomes smaller, as a result of which it takes longer before C2312 reaches the 1V2.

When the mains voltage becomes higher, the positive voltage on pin 12 becomes higher as a result of which C2312 charges up more quickly. As a result of this the duty-cycle reduces (T-on becomes shorter if T-off remains the same). In order to limit this duty-cycle when the mains voltage becomes too high the current path I_B receives and additional current path via Zener diode D6321 when the input voltage is too high. In this way there is an additional charge on C2312, as a result of which this charges up more quickly and the switching transistor switches off more quickly. The maximum duty-cycle is limited in this way so that the maximum power in the event of over-voltage can not then become greater than for nominal voltage.

9.1.8 *Standby (Fig. 9.3)*

If the set is switched to standby the 'St-By-INFO' is set low by the standby-µP (active low). As a result of this TS7312 reverses in standby, as a result of which TS7306 conducts via the +5STANDBY supply voltage, R3341 and D6317. Therefore, the diode of the opto-coupler conducts continuously in standby and the 'Audio power Supply' is completely adjusted back to 0V output voltage. In standby the photo-diode continues to be supplied by the +5STANDBY via D6316.

9.1.9 *Protections (Fig. 9.3)*

When a fault is detected on the 4 x 15W sound power amplifier panel, for example because the +16V or the -16V is too low or too high), this panel makes the 'DC PROT' line high (+5V). As a result of this TS7306 will conduct and adjust the power supply completely back (same principle as in standby).
D6316 ensures at the same time that switching transistor TS7302 does not become faulty if the positive voltage is not present on pin 12. The photo-diode is then supplied with the +5STANDBY.
As long as the +17V is greater than 19V4 then, via D6311, R3318, D6331 and D6308, transistor TS7306 will conduct and the power supply will be adjusted back to 0V.

9.2 Changes to the power supply section of the large signal panel

9.2.1 *Semi-standby mode*

For the main supply on the large signal panel it is the intention that in certain conditions the set can be placed in the semi-standby mode, for example as in EPG mode. This means that the power supply works completely but that the series switch is switched off so that the line stage does not operate. The switching on or off of the series switch takes place from the SSP panel via the 'SLOW DOWN' line. This semi-standby principle existed already in MD2.1 (i.e. when starting up the set the series switch must initially be open), but for MD2.2 there are a number of changes which have been made in the power supply section.

	TS7302 conducts, therefore energy into the transformer	**TS7302 reverses, thus energy to the load**	
C2312	positive charging current	negative charging current	
I_A as a result of U_{sec}	0	present	U_{sec} I_A C2312 charged up less negatively
I_B as a result of U_{prim}	present	0	U_{prim} , I_B , C2312 charged up positively more quickly
I_C as a result of U_{sec}	present	0	U_{sec} I_C C2312 charged up positively less quickly

9.2.2 *Degaussing circuit (only for EPG)*

Principle
When changing over from standby to semi-standby in the EPG mode then the degaussing will not work correctly because people can be frightened by unexpected degaussing. To avoid this the degaussing may only take place if the mains voltage is switched off completely and then back on again. For this purpose the control of TS7507 is adapted for sets with EPG.

Operation
When switching on the degaussing switch, TS7505 is triggered via winding 5-6 of the transformer L5550 and TS7515 so that the degaussing can start. C2514 changes up via R3532. When, after this, C2514 is sufficiently charged up (this is determined by D6514), TS7513 and, as a result of this TS7514, will start to conduct. Once TS7514 is fully conducting, TS7512 will continue to conduct and, as a result of this, TS7514 will again continue to conduct (TS7512 and TS7514 together form a thyristor function) until the mains voltage is completely switched off.
Because TS7512 now remains conducting, the base of TS7515 remains high so that this continues to be reversed, with the result that TS7507 remains switched off until the mains voltage is completely switched off.
The number of windings on the transformer is increased so that even in standby the 'thyristor' TS7512-TS7514 remains operational. As a result of this, switching the degaussing back on is only possible after C2514 is sufficiently charged up, in other words after switching off the set.

9.2.3 *Changes to the primary side for reduced standby power (only for MC44604) (Fig. 9.4)*

Introduction
In order to reduce the dissipated power in standby (without degaussing) (< 2W) a new control IC has been selected, namely the MC44604 instead of the MC44603 (the power supply with the MC44603 consumed 3.75W in standby). This new IC has an integrated 'optimalized standby function'.

Higher burst frequency (the number of burst periods per unit of time)
In order to reduce the dissipated standby power the under-voltage level of IC7520 is increased only in the standby mode, as a result of which the burst frequency (the number of burst periods per unit of time) is increased. This is done as follows:
In standby the Vcc of IC7520 increases via R3528 to the level Vth. As soon as Vth is reached the IC starts operating and generates control pulses. The power supply will now start up. Because the start-up circuit is unable to deliver sufficient current, the Vcc is normally taken over by the take-over winding 9-8 of the transformer. However, in stand-by mode the power supply is adjusted back so much that the take over is insufficient and the Vcc sinks immediately. As soon as the Vcc arrives below the under-voltage level the IC, and thus the power supply, will be switched off again and the Vcc will increase via R3528. Because with the MC44604 the under-voltage level is increased only in the standby mode, the number of burst periods is increased per unit of time. The frequency at which the power supply tries to start up during the burst is the same as that of the MC44603 and the same as that in normal operation (the power supply is an FFS (Fixed frequency Supply), in other words it also runs at approximately 40 kHz in standby mode).

Other changes to the primary side for reduced standby power for the MC44604
- R3528 is increased for the MC44604 as a result of which the dissipation in this resistor is smaller. In order to ensure that the start-up time is the same as before the C2525 is smaller for the MC44604.
- Because the C2533 (voltage on pin 11 determines the duty-cycle) is smaller for the MC44604, the duty-cycle is built up more quickly as a result of which the slow-start runs more quickly. As a result of this the burst period (the time that the power supply tries to start up in standby) is shorter, as a result of which the power supply itself works more efficiently (less dissipation losses in the power supply itself).

9.2.4 *Changes to the secondary side for the reduced standby power (only for MC44604) (Fig. 9.5)*

Place MC44604 in standby mode
The MC44604 must receive a sign in order to enter the standby mode with reduced burst frequency. Pin 15 of IC7520 is used for this. As soon as the input current on pin 15 is greater than 35 mA then IC activates its standby mode.
In order to create this current surge a change has been made to the secondary side of the main power supply. When the STANDBY signal is low (active), TS7589 will reverse as a result of which the full +5STANDBY power supply suddenly arrives on the positive side of C2590. C2590 is unable to follow this rapid change and drives TS7588 into full conductance as a result of which a large, brief current starts to flow through the photo-diode of TS7556 (opto-coupler). As a result of this a brief, strong current peak which flows to pin 15 of IC 7520, is generated on the primary side and the MC44604 activates its standby mode.

Maintaining power supply in standby mode for a power supply with the MC44604
Because C2590 charges itself up as soon as the standby mode is activated, at a given moment TS7588 will start to reverse. Because TS7591 only conducts continuously in standby mode (only in the standby mode is the +5STANDBY power supply on the base of TS7591 via R3586 and R3598), a current can only still flow through the diode of the opto-coupler via D6592 and TS7591 to earth. This current is large enough to maintain the standby state. Because TS7591 also conducts during the 'burst' (the time that the power supply tries to start up in standby) the power supply is adjusted back even harder during the 'burst'. As a result of this the 'burst' will not last as long.

Stable +5STANDBY with the MC44604
In order to prevent that the +5STANDBY becomes too low in standby mode as soon as the input voltage of the voltage stabilizer IC7560 is at the lowest point (as a result of which even a POR could be generated), a few changes have been implemented for the power supply with the MC44604:
- Due to the higher burst frequency the ripple on the 5STANDBY is smaller. As a result of this the smoothing capacitor C2571 can be smaller.
- D6561 has been replaced by a type with a low forward voltage (0V2), as a result of which less voltage loss occurs.
- The transformer has been examined again in order to obtain improved efficiency in standby mode.

In this way it is ensured that the input voltage of the voltage stabilizer IC7560 is always large enough to create the +5STANDBY.

Changes for normal operation with the MC44604

- D6550 is added to protect the power supply if the +5STANDBY fails. If the +5STANDBY fails, the STAND-BY signal drops out as a result of which TS7592 starts to reverse. As a result of this thyristor TH7590 starts to conduct as a result of which the voltage over C2561 and C2571 will become too high. Zener D6550 has been added in order to protect these capacitors. At the same time this Zener ensures that the power supply is adjusted back to its maximum. The power supply will start up again, be adjusted by the maximum again, etc.→ hick-up mode.
- Because more energy is demanded from the +8V6 power supply in the MD2.2, the +8V6 voltage stabilizer IC7569 is a type which only requires low over-voltage in order to be able to generate a stable +8V6 (a so-called 'low drop' type).

9.2.5 Primary over-voltage for the MC44604 (Fig. 9.4)

Over-voltage detection for the MC44604
For the MC44603, over-voltage detection takes place via the Vcc input of the IC. In the MD2.2 for an MC44604 the separate OVP input is used on pin 6 of the IC. Since the Vcc depends too much on the mains voltage (+300V DC) and the load, it is possible that at high load large peaks arrive on Vcc as a result of which the OVP is triggered. Therefore, the voltage on winding 9-8 of the transformer is detected via a clamp circuit and a divider (D6548, R3548 and R3549). Only if pin 6 becomes higher than 2V5 will the power supply go into protection (hick-up mode).

Operation at increased input voltage (+300V DC)
In order to obtain a more constant output power as a function of the mains voltage, R3529 is added between the +330V DC and the current sense pin 7 of the IC. This sets a DC component which is dependent on the level of the +300V DC on the current sense input at the top of the current sense voltage, such as that which is measured on the source of the TS7541 FET-link. As soon as the +300V DC increases the complete current sense signal is raised a little on pin 7 as a result of which the T-on decreases by a constant value.

Video processing

9.3 PALplus (fig. 9.6)

9.3.1 Introduction

With 16/9 sets, the PALplus module takes care of both the vertical conversion and also the improved separation between luminance and chrominance.
The module receives the 8 bit Y, 2 bit U and 2 bit V signals from the A/D convertor in the Feature Box. After the PALplus decoding, the signals again go via the AI panel to the Feature Box, where the 50 Hz picture is converted to 100 Hz. Control is provided by the *snertbus* of the processor on the Feature Box. The PALplus module, the AI PCB and the Feature Box are connected by a series of timing signals.

9.3.2 General operation

The MACPACIC (Motion Adaption Colour Plus And Control IC) is controlled by the *snertbus*. The most important
function of this IC is to take care of the separation between luminance and chrominance if MACP is used in the transmitter. The MACPACIC uses both the direct Y, U and V and also those stored in MEM1.
MEM4 is an extra working memory.
The processed picture information is written to memories MEM2 and MEM3.
The VERIC (Vertical Reconstruction IC) reads Y, U and V from memories MEM2 and MEM3 and once again makes a picture of 574 lines from the 430 picture lines by means of the 144 helper lines. This IC is monitored by the MACPACIC which generates a number of clock and sync signals for this.
The module input and output are 16 MHz. The module operates at 32 MHz.

9.3.3 Motion Adapter Colour Plus

The MACPACIC sees to separation of chrominance and luminance if MACP (Motion Adaption Colour Plus) is used in the transmitter. Because of this, the picture is free from chrominance and luminance crosstalk.
The first raster is written to memory MEM1. When the second raster is presented directly to the MACPACIC, MEM1 will be read out causing both rasters to be present at the same time at the MACPACIC input.
MACP can be used independently of the picture mode, i.e. also with 4/3 transmissions.

9.3.3.1 Film mode
In the film mode, 50 rasters are made of the 25 pictures in the transmitter. There is no time difference between the successive even and odd rasters. Because of this,
the picture information of line N in the even raster will be nearly identical to that of line N in the following odd raster. The chrominance of line N in the first raster is in phase opposition to the chrominance of line N+312 in the second raster. In the receiver, addition of the even and odd rasters will thus produce a Y signal which is free from chrominance. Because of this, no further suppressions of the chrominance
at 4.43 MHz are required in the Y channel.
After the PAL demodulator, frequencies around the 4.43 MHz in the Y signal give a U and V component which is in phase opposition for the lines N and N+312. Addition of two successive rasters in the U and in the V channels will eliminate this colour component.
These operations are termed FCP (Fixed Colour Plus), which produces the same result as a comb filter.

9.3.3.2 Camera mode
In the camera mode, unlike the film mode, there is a time difference between the successive even and odd rasters. This time difference causes differences in the successive rasters, especially in content, with fast-moving pictures. The aim will always be to switch over to FCP as far as possible since this gives the best picture quality. This is only possible however if there is almost no difference in picture information with the successive rasters.
Accordingly a movement detector is built into the decoder and this determines for each small part of the picture whether any movement is present. Memory MEM4 is used for this.
With pictures where there is little movement, indicated by the movement detector, switchover to FCP occurs.

With fast-moving pictures the bandwidth of the Y signal is limited to 3 MHz, because of which the chrominance is removed at 4.43 MHz. The resulting Y, U and V are written by the MACPACIC to memories MEM2 and MEM3.

9.3.4 *Vertical conversion*

To reproduce a 16/9 picture in a 4/3 format the 574 picture lines are converted to 430 lines in the transmitter. Because of this, picture information is lost, and without correction this leads to reduction in the vertical resolution.
To be able to make good this loss in vertical resolution, the 'lost' Y information is AM modulated on a 4.43 MHz carrier wave with the same phase as the U signal and is processed in the black bars above and below the picture.
The 72 lines in the black bar above the picture contain the 'lost' information of the upper half of the picture. The 'lost' information from the lower half of the picture is to be found in the 72 lines in the black bar below the picture. These lines with modulated 'lost' information are also termed 'helper lines'.
The VERIC will once again make a picture of 574 lines from the 430 picture lines.
A 'reconstruction' takes place for the Y signal, in which use is made of the 144 helper lines. Since no helper signal is present for U and V, these are determined by 'interpolation'.
When the upper half of the picture is processed, the helper lines are routed to MEM2 and the picture to MEM3. For the processing of the lower half of the picture, the picture goes to MEM2 and the helper lines to MEM3.
Writing to these memories is done by the MACPACIC, readout being carried out by the VERIC.
In film mode, a complete picture is present after two rasters and because of this the conversion will take place for each picture.
In camera mode because of the time difference between two successive rasters there is a difference in picture content because of which conversion must be carried out for each raster. The helper lines are then composed differently and the use of the memory will therefore also be different.

9.3.5 *Transparent mode*

With a non-PALplus transmission, luminance and chrominance are switched through in the MACPACIC.
The top and bottom picture halves are routed respectively into memories 2 and 3. The VERIC then sees to it that the information for the even and odd raster is read in the correct way.

9.3.6 *Detection*

To be able to recognise when this extra PALplus information is present in the video signal and to be able to detect and demodulate this correctly, some extra information is also added.

Line 23 therefore contains no picture information but does contain some signalling bits such as:
- camera or film mode
- MACP used
- helper lines present.

These bits are detected by the MACPACIC.
This line also contains a reference burst with the correct amplitude, DC and phase for the helper lines.
Line 623 contains the reference level for white and black.

9.3.7 *Remarks*

With a PALplus set, the chrominance IC TDA9144 is used instead of TDA9141 or TDA9143.
The helper lines with Y information modulated at 4.43 MHz, are demodulated in the PAL demodulator and multiplexed in the Y signal. Since information which comes out below the back level is present here, the blanking in the IC has been adjusted.
The chrominance IC TDA9144 generates line 22 which contains the references for the black level and the DC level of the helper lines. Some filters in the IC, both in the luminance and in the chrominance channel, are if necessary switched off with PALplus.
There is no PALplus recognition within the TDA 9144.
This means that all PALplus functions from the microprocessor must be indicated via I²C.
The microprocessor in turn receives PALplus recognition information from the PALplus module.
The MACPACIC generates the 16 MHz and the 32 MHz clocks. The phase between these two clock signals is adjusted by S5100.
All processing operations in the PALplus module are digital.

9.4 CRT & Scavem

9.4.1 *Power limiting of the RGB amplifiers*

9.4.1.1 *Introduction*

The RGB output amplifiers are identical to those used in the MD 2.1, though in the lowest segment of the MD2.2, the RGB output stages are no longer fitted with heat sinks. To ensure that the dissipated power, which is produced chiefly at high frequencies, remains within the limits of these output stages, an extra circuit is added. In case of consumption greater than 3.6 W (measured via R3373), this circuit will reduce the definition of the picture. This causes the current consumption of the output stages to fall. In practice, this power reduction circuit will only be activated in case of a picture with a great deal of noise.

9.4.1.2 *Circuit*

The power consumed by the output ICs is detected across resistor R3373; this is fed to TS7374. This is an amplifier with an amplification factor of -1.
The collector voltage of TS7374 is thus equal to the voltage measured across R3373.
If the collector voltage of TS7374 rises, then TS7377 will conduct more and the collector voltage of TS7377 falls.
In case of current consumption higher than 18 mA (3.6 W), the collector voltage of TS7374 becomes greater than 6 V, the collector voltage of TS7377 becomes lower than 11.4 V and because of this, TS7338, TS7348 and TS7358 start to conduct.
When these transistors conduct, a capacitance is placed in parallel with the input signal, causing the picture definition to be reduced and the current consumption, and thus the dissipation too, to fall once again.

9.4.2 *Improved SCAVEM*

To improve Scavem operation, a larger current of about 1 A pp is sent through the Scavem coil. To achieve this, the amplification of the output stage is adjusted (R3408 200 ohms instead of 100 ohms) and the output transistors TS7414 and TS7415 are changed to power transistors (BD139, BD140).

Ciruit description

9.5 Luminance Transient Processor (LTP) (fig. 9.7)

9.5.1 Introduction

In the MD2.2, the LTP IC TDA9177 may optionally be added in front of the video control IC TDA4780. This IC is I²C controlled and carries out some corrections to the Y signal. These are:

- smart peaking
- step improvement
- noise suppression

9.5.2 Functional description

9.5.2.1 The input signals

The input signals are formed by YUV on pins 5, 9, 7 and a sandcastle on pin 1. The output signals are YUV on pins 20, 16 and 18. The U and V signals are delayed according to the corrections to the Y signal.

9.5.2.2 Smart peaking

Smart peaking is a circuit which only applies peaking to small signal changes; because of this, details in the picture can be seen more clearly. The extent of peaking and the signal amplitude to which smart peaking operates, can be adjusted via I²C. With large signal amplitudes (e.g. with black-white transitions) there will be less peaking to avoid unwanted shadow effects. When the LTP is used, the software peaking of the Feature Box will be turned off but the hardware amplification continues to operate.

9.5.2.3 Step improvement

This provision ensures than black-white transitions are made even steeper. The result of this is that the picture gives a still sharper impression.

9.5.2.4 Noise suppression

The LIMERIC in the Feature Box determines the noise level in the picture and appraises this by means of the noise figure which is passed on via I²C to the microprocessor. On the basis of the noise figure, in addition to the degree of noise suppression in the LIMERIC and the degree of DNR, the degree of peaking together with the 'steepness' and the 'coring' in the LTP is now also reduced in proportion with the rise in the noise figure. Because of this, even better noise suppression can be arranged.

9.6 Chrominance notch filter

As well as a chrominance-free Y signal, the COMB filter also produces a few unwanted residues in the vicinity of 4.43 MHz. These residues can be clearly seen when there are sharp colour transitions. To suppress this interference, a filter is fitted between the Y output of the COMB filter and the input of the chrominance IC (IC 7352). This filter is switched on together with the COMB filter. As soon as the COMB filter is switched on (COMB ON/OFF is high), TS7396 will then conduct and the LC circuit (C2351, C2352 and L5382) is switched on. This LC circuit gives an extra 6 dB of suppression at 4.43 MHz.

9.7 Transparent OSDs and menus (fig. 9.8)

9.7.1 Introduction

In the first instance, the operating menus of GFL and MD2.1 consisted of a menu block with a background colour and printed on it the menu text in a foreground colour. With the menus of the MD2.2, the menu block with background colour is replaced by a block in which the main picture is displayed attenuated and the menu text is shown in white on it. With the so-called 'Blending' circuit it is possible to display these so-called 'transparent operating menus' on the screen.
To produce these menus, a number of control signals are required, such as the RGB signals and the Fast Blanking. These four signals were hitherto sufficient to be able to display a menu. However, for the transparent operating menus an extra timing signal is required, namely the COR-NOT signal. The signals are now used as follows:

- At the time that the 'menu block' is written, the TXT-IC produces a low on the COR-NOT line. At that time the blending circuit will ensure that if a specified beam current is exceeded, the contrast is reduced via the beam current limitation in the video controller TDA4780. By only reducing the contrast with effect from a specified beam current, darker picture sequences are displayed unaffected so as to prevent these disappearing completely below the black level.
- However, when text is to be displayed in a menu block, the Fast Blanking information is used to switch off the blending circuit again. Because of this, the contrast is not reduced only where the text is shown in white.

9.7.2 Blending circuit

The blending circuit is located on the TXT+control panel.
If we assume in the first instance that there is no menu (COR-NOT line is high), then TS7453 conducts and TS7454 is in the blocking state. Because of this, TS7455 conducts in such a way that TS7457 blocks sufficiently to ensure that the V_{OUT} can follow the V_{BCI} via the BE of TS7459 and the BE of TS7458. At the time the menu appears, the COR-NOT line will become low and TS7454 will conduct. The resistor division R3445 and R3443 now sees to it that the base of TS7455 is set to 2V8.

- As long as V_{BCI} < 2V8, V_{OUT} follows the V_{BCI} via the BE of TS7459 and the BE of TS7458. This applies to the darker picture sequences and so these are not attenuated.
- If a voltage increase to above 2.8 V occurs, the base of TS7455 will only partially rise (due to the voltage division R3443, R3444, R3445). This only partial voltage rise is passed through the BE of TS7455 and the BE of TS7457 to the V_{OUT}. Because of this, the V_{OUT} will rise less strongly only if the V_{BCI} is greater than 2V8 (lighter picture sequences). This results in a reduction in contrast.

In other words, the DC setting of the base of TS7457 governs the changeover point of the contrast reduction (and thus the brightness at which the contrast reduction must begin with transparent menus).

9.7.3 PIP in front of TXT in a set with blending circuit

In a set without transparent OSDs and menus (MD2.1), it is desirable to have the PIP card always in the foreground (and thus in front of the menus, in front of the OSDs and in front of the TXT). This is done in MD2.1 via the TXT-KILL line and TS7518 (in PIP-mode TXT-KILL is high causing the FBL-TXT to be short-circuited (deactivated) via TS7518).
In a set with transparent OSDs and menus (MD2.2), the PIP card is placed in the background so that the PIP card is viewed through the transparent OSDs and manus. Only in the TXT mode is it desirable to have the PIP card in the foreground. For this the circuit round TS7221 has been added to the FBL-TXT line on the TXT+control panel. C2220 is chosen so that TS7221 passes the FBL-TXT signal to the TXT-ENABLE only in the TXT mode and not in any other modes.

- Only in the TXT mode is the FBL-TXT line constantly high so that C2220 is charged and TS7221 conducts constantly. The FBL-TXT is passed to the TXT-ENABLE and therefore with PIP the FBL-TXT is short-circuited via the TXT-KILL (PIP in front of TXT).
- In all other modes (e.g. OSDs, menus and TXT-mixed mode), FBL-TXT is not constantly high. Because of this, C2220 is not sufficiently charged so that TS7221 is constantly in the blocking state. Because of this, the FBL-TXT is not passed to the TXT-ENABLE so that with PIP, the FBL-TXT cannot be short-circuited via the TEXT-KILL (PIP behind OSDs, menus, mixed mode).

9.8 Automatic Aspect Ratio Adaption (AARA)

9.8.1 Introduction

With certain wide picture transmissions, the WSS bit (Wide Screen Signalling bit) is not included with the transmission. This applies to transmissions in 22/9, 16/9 or 14/9 format.
The customer on the reception side is then faced with a picture where the format is not correctly adjusted (black bars). This can then only be corrected by operating the picture format button on the remote control.
AARA now provides automatic adjustment of the picture format.

9.8.2 Operation

The software in the Feature Box contains a 'black bar detection algorithm'. This black bar detection looks to see whether black bars are present at the top or bottom of the picture. This is done by means of the SMARTIC.
If these bars are present for more than 22 seconds then the picture format is corrected to a maximum of 22/9. The picture width is adjusted by the PANIC and the picture height by the PROZONIC/MELZONIC.
Black bar detection operates independently of the operating software of the set.
Black bar detection can be overruled by:

- the WSS bit
- by an external 16/9 status on a scart input
- by adjusting the picture proportions manually

This function is implemented independently by the software in the Feature Box.

Audio processing

9.9 Audio amplifier

9.9.1 Introduction

For the MD2.1 sets we had different versions:

- Non Dolby fighter version
- Non Dolby horn version
- Non Dolby subwoofer version
- Dolby subwoofer version

In order to be able to delivery more audio power, for the most expanded MD2.2 a choice can be made for a separate audio amplifier, the so-called Audio Amplifier module. For this the audio power supply has to be stronger, as a result of which a stronger power supply unit - the so-called 'Audio Power Supply' - is used. As a result of this we have one additional version in the top MD2.2 sets:

- Top Dolby subwoofer version 4 x 15W.

9.9.2 Block diagram of the Dolby subwoofer version (Fig. 9.6)

The audio signals Surround, Left, Right and Centre originate from the Dolby Audio Module. The power of the output amplifier is 15W per channel.
On the LSP the output amplifier in a Top Dolby subwoofer version is only used for amplifying the surround-sound signal. This has the advantage that a separate channel is provided for both L and the R surround. Because the output signal from the amplifiers is at a DC level of +14V, the outputs are AC coupled to the surround loudspeakers.
On the Audio Amplifier Panel the amplifiers are localized for the Left, Right, Centre and Subwoofer signal.

- The signal which is intended for the subwoofer is a mono signal (L and R are added), because the low frequencies are not direction sensitive. The higher frequencies are filtered out from 270 Hz. The DBE circuit which was previously on the LSP, has now been mounted on the Audio Amplifier Panel. This DBE (Dynamic Bass Enhancement) circuit provides an improvement in the low tone reproduction which is supplied to the subwoofer. The lower half of IC7740 is used for amplifying the subwoofer signal.
- The L and R signals are amplified in the 2 upper halves of amplifiers IC7740 and IC7750. The L and R signals both run via a 200 Hz filter to the internal squeeters which provide the stereo effect, or directly to the internal loudspeakers. In the latter case the input of the subwoofer amplifier is also connected to earth.
- The Centre signal runs via a high-pass filter at 310 Hz and the lower half of amplifier IC7750 to the centre speakers at the bottom centre of the set.

The internal or external selection is determined by a switch on the Clickfit Panel.

9.9.3 *Internal/external selection (Fig. 9.10)*

The selection is made using a switch on the Clickfit Panel which sends either +6V or earth to pins 9, 10 and 11 of IC7735.
For the internal mode pins 9 to 11 (inclusive) are set low. As a result of this all switches are in the lowest position.
For the L and R signal which is intended for the squeeters, all frequencies lower than 270 Hz are filtered out first.
Before these signals arrive on the output amplifiers they are initially attenuated by R3700, R3701, R3702 and R3703.
The power supply for these output amplifiers is symmetric (+16V and -16V), as a result of which all outputs can be coupled directly to the loudspeakers. The amplification is determined internally in the output amplifiers by means of 2 internal resistors between the input and the output.
The Boucherot filter consists of C2746, C2776 and R3746 and serves to filter out oscillations at high frequencies.
All amplifiers are almost identical, only the values of the Boucherot filter can vary depending on the type of loudspeaker which is used.
The subwoofer signal is a mono signal and runs via the DBE circuit to the respective output amplifier in the internal position.
In the internal position the subwoofer signal from the output amplifier is connected to earth, as a result of which the subwoofer is switched off. The L and the R signal is sent directly to the output amplifiers.
The centre channel remains operational, irrespective of the position of the INT/EXT switch.

9.9.4 *Mute circuit (Fig. 9.10)*

The sound can be muted in various ways in the output amplifiers:

- When the supply voltage becomes smaller than +6V or -6V, the IC will automatically interrupt its non-inverting input. This IC therefore automatically suppresses unwanted signals when switching on and switching off.
- The mute can also be activated externally (active low) via the AMP-MUTE2 line, which originates from the mP. This mute is switched off by the remote control, blue mute, programme switching, etc.
- When switching on the mains voltage, electrolytic capacitor 2788 forms a brief short-circuit, as a result of which the voltage is held low at point 2, as a result of which the IC is muted. This avoids a plop when switching on.

9.9.5 *Protecting the audio output stage (Fig. 9.10)*

The supply voltage of the output amplifiers is symmetrical (+16V and -16V). Therefore the outputs from the amplifiers are connected directly to the loudspeakers.
Therefore, during normal operation the output signal contains no DC components. C2761 can absorb any small fluctuations.
If one of the supply voltages now becomes too high or too low or if DC components arrive on one of the outputs because, for example, an IC is faulty, then TS7760 or TS7761 will start to conduct. As a result of this a current flows through R3760 which causes TS7762 to conduct.
The DC-PROT / STBY line therefore comes to 5V, as a result of which the Audio Power Supply goes into protection.
If the positive and the negative supply voltages reduce simultaneously, the voltage on C2761 remains at approximately 0V.
On the centre signal there is a DC voltage of approximately 6V, this is on the emitter of TS7767.
When the +16V becomes lower than 11V, TS7767 and thus TS7760 start to conduct and the DC-PROT signal will still be activated.
In stand-by the 16V supply voltage is switched off; the DC voltage on the centre signal is 0V and TS7767 does not conduct. The C AC signal is max. 0.5V and does not influence the circuit.

9.9.6 *DBE circuit*

DBE or 'Dynamic Bass Enhancement' is used in order to obtain an improved lower tone reproduction using the same subwoofer.

- Circuit 1 adds the L and R signals (the subwoofer requires the low information of both signals) and sends this added signal through a low-pass filter. All frequencies higher than 270 Hz are feedback intensely.
- Circuit 2 has a suppression at 70 Hz (90 Hz for Acoustic Horn).
- Circuit 3 has a frequency-dependent feedback. At 60 Hz the feedback resistance, and thus the amplification too is the greatest. D6720 and D6721 form a limiter if the signals one too large. Circuits 2 and 3 together form an amplification of the frequencies around 60 Hz.
- Circuit 4 is an invertor which 'rectifies' the signal again before it goes to the output amplifier of the subwoofer. By using this stage the amplification factor can still be changed if required. At the same time R3728 and C2728 form a filter which truncate all harmonics above 700 Hz which are caused by the DBE circuit.

9.10 Audio path on the Dolby Audio Module for Double Window (Fig. 9.11)

The 'Double Window' feature also has consequences on the audio section. For Double Window it applies that the sound of the main picture (the left picture) always goes to the loudspeakers, while the sound of the second picture (the right picture) goes to the main headphones.
The additional headphone selection takes place by using an additional switch SK4 and TDA9860.
SK4 provides the selection for the various audio sources, while TDA9860 makes the selection between:

- The classic headphones.
- Double Window headphones originating from an external audio source (SK4).
- The mono signal originating from the tuner on the Full Double Window module.

The configuration around SK1 is identical to that of MD2.1 with the difference that in the MD2.1 this switch was mounted on the SSP and all signals required in the MD2.2 are supplied to the Audio Module via a ribbon cable from the SSP, where the switch is now mounted.
Because SK1 is now on the Audio Module, SK4 can now be switched parallel directly here. This HEF provides the selection of the various audio sources for the headphones in Double Window. SK4 is driven by 2 bits of IC7590 which are applied via I^2C.
Both HEF's are supplied with an 8V5 power supply which comes from the SSP.
For SK1 there are two inputs for front: front L/R and front L/L. As a result of this it is possible to place a mono signal, originating from the front, onto both the left-hand and the right-hand channel.

However, SK4 has no automatic answer to both channels for the front input (all inputs are occupied), for a mono front signal only the left-hand loudspeaker will be driven to full power.
This is solved by IC7590. For a mono signal IC7590 places the mono signal on both the left-hand and the right-hand side. IC7590 is a TDA9860 which is also used in the GFL. However, for the MD2.2, 3 functions of the IC are used as additional functions with regard to the GFL (the remaining functions are 1 to 1 identical):

- The selector switch
- The volume control: which can now no longer be executed on MSP3410 because not all audio sources are offered to MSP3410 for the 'Video Dualscreen' headphones.
- The 2 control bits (pin 2, 31) for SK4.

Ultimately the input of IC7590 is sent to the headphones amplifier.

Wireless dolby

9.11 Transmitter (Fig. 9.12)

9.11.1 Block diagram

We can recognise 3 basic blocks in the block diagram of the transmitter:

1 FM transmitter (1403)
The FM transmitter is a screened module which is I^2C controlled by the main-μC of the TV:
   * At program switching the incoming surround sound signal from the Dolby Audio Module is muted (by the dolby IC SAA7710)) to avoid plops in the surround speakers.
   * At switching off the surround mode, first the incoming surround sound signal is muted (to avoid plops) and then the local oscillator in the transmitter is switched off. As the local oscillator is switched off also the 19 kHz pilot and the 433 MHz carrier are no longer be transmitted any more, which is recognised by the receiver. In that case after 15 seconds the receiver switches to standby.
   * Selection between the 7 channels around the 433 MHz.

2 Audio path
The basic audio path contains of plug 1409, input buffer IC7401A, a 15 kHz low pass filter L5401 (prevent high frequencies to the compander), a compander (IC7403 and IC7402B) and a buffer IC7404A.

3 Pilot generator
Although the transmitter transmits a mono signal, a pilot at 19 kHz pilot is used to enable the receiver to recognise whether the received signal is the wanted signal. This 19 kHz pilot is generated by an 38 kHz oscillator and a 2-divider around IC7404D/C.
Just before injection the pilot is added with the companded and buffered mono surround signal.

9.11.2 Compander

As the transmitter is an FM-transmitter, the amplitude of the audio and pilot signal is 'real time' converted into a FM-sweep. Large amplitudes are converted into a large FM-sweeps, small amplitudes into a small FM-sweeps. Small FM-sweeps have a bad signal to noise ratio and large FM-sweeps increase the required bandwidth. Therefore a so called 'compander' is used to limit the bandwidth and to increase the signal to noise ratio of the transmission. This compander attenuates large amplitudes (e.g. +10 dB to +5 dB), bypass middle amplitudes (0 dB to 0 dB) and boosts small amplitudes (e.g. -20 dB to -10 dB). On the receiver part this correction is corrected back by a so called 'expander'.
The basic compander configuration is given below. There is a variable gain cell (variable resistor inside NE572) in the feedback loop of an Op Amp (NJM). The resistance of the gain cell is controlled by the voltage across C2408 which is charged by the rectifier.

9.11.3 Pilot generation

The pilot oscillator is build around a 38 kHz tuning crystal 5403. Two inverters IC7404E and IC7404F - used as amplifiers - are used to make a buffered 38 kHz square wave signal.
The 38 kHz block is divided by 2 by the circuitry around the inverters IC7404D and IC7404C.

- On the moment the 38 kHz block becomes 'high', D6401 and TS7405 conduct. Via D6401 the input from IC7404D becomes 'high'. The output of IC7404D becomes 'low' and so the output of IC7404C becomes 'high' and keeps the input of IC7404D 'high'.
  As TS7405 conducts, C2438 is charged.
- On the moment the 38 kHz block becomes 'low', D6401 and TS7405 block. By now C2438 is discharged via R3449 as the input of IC7404C is still 'low'.
- On the moment the 38 kHz block becomes 'high' again, D6401 and TS7405 conduct. By now the input of IC7404D becomes 'low' as C2438 is still 'low' and TS7405 conduct. This 'low' on the input from IC7404D is long enough 'low' (via D6401 it wants to become 'high' again), to trigger the hold-circuitry IC7404D and IC7404C to a 'low' state.

The output is a sine wave due to the low pass filter R3450 and C2439. TS7406 is a buffer of the 18 kHz pilot generator.

9.11.4 Pilot and companded surround sound adding

The buffered and companded mono surround signal is fed to TS7410. This TS7410 has 3 functions:

- Adding the buffered and companded surround signal with the 19 kHz pilot.
- Buffer for the surround signal.
- Low-pass filter at 60 kHz via C2435.

Before injection into the modulator input there is the provision to align the maximum modulation (maximum FM sweep of 75 kHz) with potentiometer 3442.

9.12 Master and slave speaker box (Fig. 9.13)

9.12.1 General

The master and slave speaker box can be used wireless and wired. In case the system is used wired the cinch-plug on the master is used as input and the system automatically switches into the wired mode (by then as incoming signal from the TV the amplified surround signal from the rear speaker clickfit connector of the TV is used). Both wired and wireless make use of the amplifier in the master box. The slave box is a loudspeaker only which is driven by the master box. The following main circuitries are located inside the master box:

- Supply
- Receiver
- Amplifier

9.12.2 Supply

The supply consists of two conventional 50 Hz mains supplies.

- The standby supply is built up around mains transformer 5312. This standby supply starts immediately when the mains-switch TV-3 is switched on. By then via bridge rectifier D6312-6315 and stabiliser TS7275 the supply voltages V! and V2! are present.
- The main supply is built up around mains transformer 5313. This main supply is only active when the set is in normal operation and takes over the largest part of the energy delivery to stabiliser 7275 via D6260. In normal operation STBY_COM! is 'high', TS7273 blocks, TS7274 blocks, via R3316 TS7310 conducts and so relais 5310 is energized and the switch is closed.

Different situations:

- *Start up*
  At start up the system with mains switch TV-3, C2293 is charged but is even discharged faster via the 2 diodes D6278 and D6277. TS7272 blocks, TS7274 blocks, TS7310 conducts and so both supplies start up immediately.
- *Switch off*
  At switching off the system with mains switch TV-3, C2293 is not discharged any more via the 2 diodes D6278 and D6277. As a result C2293 is charged quickly and so immediately switches off the main supply. In this way a switch-off plop is prevented.
- *STBY_COM!*
  In case the STBY_COM! signal becomes 'low', the system must go into standby mode. In case STBY_COM! becomes 'low', TS7273 conduct, TS7274 conduct, TS7310 blocks and the main supply is switched off.
- If STBY_COM! is 'low' TS7265 will conduct and switch on the red LED. If STBY_COM is 'high', TS7265 blocks, TS7266 conducts and so the green LED is switched on.
  - ★ STBY_COM! 'low' → receiver in standby mode, main supply switched off, red LED
  - ★ STBY_COM! 'high' → receiver in normal operation, main supply switched on, green LED

9.12.3 Receiver

9.12.3.1 Block diagram

We can recognise 4 basic blocks in this diagram:

1. Frontend (1710):
   Here the incoming 433 MHz aerial signal is filtered, amplified and via a mixer converted to a fixed 10.7 MHz IF frequency. The frontend is housed in a separate shielding unit to minimise the local oscillator radiation. There is an antenna connected to the input of the frontend.
2. IF and decoder part (7710):
   Here the 10.7 MHz IF signal is filtered via 2 standard FM ceramic filters and fed to the IF FM-demodulator IC7710. In this IF FM-demodulator the mono surround signal is demodulated and the field strength and the presence of the pilot of the incoming 10.7 MHz signal is measured.
3. Audio path:
   The received audio signal is filtered and expanded in dynamic range, to correct the companding circuitry at the transmitter side. This circuit uses the NE572 hi-performance circuit with an extra opamp. Basically this circuit multiples the incoming dynamic range with a factor of 2 dB.
4. Microcomputer (7750):
   The μC reads the position of the 7-fold channel switch, controls the frontend via I²C and drives its mute pin.

9.12.3.2 IF demodulator

To make discrimination possible between the 7 channels that can be selected some selectivity has to made at the IF channel. Two standard 10.7 MHz ceramic filters with TS7707
in between are used for optimal behaviour towards S/N.
The IF-demodulator IC7710 (LA1805) has a main IF amplifier, and a FM and AM (not used) detector.
The IF-signal comes in at pin 1 and is boosted by a very high gain to a level where it is suitable for detection.
The detector needs a quadrature coil at pin 20.
The detected signal comes out at pin 17 and goes in again at pin 16. The stereodecoder is used for pilot detection only and is a classic system with a VCO (Voltage Controlled Oscillator) running at 152 kHz which can be adjusted by potentiometer 3721.
The AF outputs (pin 9 or/and 10) are filtered and amplified before they are presented to the expanding circuit. The filter 5730 is a double notch filter with filters out peaks at 19 and 38 kHz.

9.12.3.3 Expander circuit (IC7770)

The key IC is the NE572 which is used as an expander. Via this expander, the compander function in the transmitter side is corrected. This expander boost the high amplitudes (e.g. +5 dB to +10 dB), bypass middle amplitudes
(0 dB to 0 dB) and attenuates low amplitudes
(e.g. -10 dB to -20 dB).
The circuit is in fact a standard opamp (NJM) circuit where the input series resistor is formed by a gain cell. This gain cell is a variable resistor that is driven by a current that is obtained by rectifying the input current. Any variation of the cell impedance will change the gain of the main opamp NJM4560. Now the input of the gain cell and the rectifier are tied to the same level. When the input signal Vin drops by e.g. 6 dB, then the gain control current from the rectifier will also decrease with 6 dB (factor of 2).

Therefore the total change in Vout will be 12 dB, giving in fact a factor 2 (in dB) expansion. The detector circuit rectifies the input signal current. The V_{REF} for the opamp is extracted out of the NE572 IC via proper RC elements.

9.12.3.4 Microcomputer (IC7750)

The microcontroller is a MC68HC05 type with 1.2 kbit ROM and 14 I/O lines. The μC clock frequency is derived from a ceramic resonator of 4 MHz.
The internal clock is divided down to 500 kHz internally.
The reset circuitry around TS7755 creates a POR for the μC to assure that the μC only starts its program when the supply voltage is stable enough. The μC has the following functions:

- Read the setting of the 7 position slide switch continuously. In an internal look-up table the 7 required frequencies for the local oscillator are stored.
  The μC controls the local oscillator in the frontend 1710 to 1 of the 7 desired channels via the I^2C bus. The output towards the synthesiser chip in the front-end is in I^2C format, however there is no real handshaking as the synthesiser is the only device on the bus.
- In case the μC operates a channel switch, pin 11 is made 'high' for a moment. This to prevent plops when switching from one channel to another.
- In case the μC has detected that the receiver 1710 has received an incoming signal which is under the threshold level for more than 90 seconds, than pin 11 is made 'high' constantly.

9.12.3.5 MUTE signal

The MUTE signal on pin 5 of plug 1791 is 'high' in one of the following possibilities (OR-function):

- In case the 10.7 MHz field strength at the input of the IF-detector IC7710 is not strong enough. By then pin 8 of the IF-demodulator IC7710 and so - via D6710 - the MUTE signal becomes 'high'.
- In case the 19 kHz pilot-tone is not detected, pin 7 of the IF-detector IC7710 and so via D3710 the MUTE signal becomes 'high'. Even though the transmission is mono, this pilot tone is used and detected just to recognise that the received signal is the required signal.
- In case the μC operates a channel switch, pin 11 is made 'high' for a moment. This to prevent plops when switching from one channel to another.
- In case the μC has detected that the receiver 1710 has received an incoming signal which is under the threshold level for more than 90 seconds, than pin 11 is made 'high' constantly.

This MUTE signal is used for:

- Direct muting of the AUDIO signal at pin 2 of 1791 via mute circuitry TS7784 and TS7789. These transistors are connected inverse (collector and emitter are changed), but the functionality is the same. In case MUTE is high, the base-collector diode conducts and short the AUDIO signal via the emitter to the collector. In this way a better MUTE behaviour is obtained.
- Further this MUTE signal is fed to the circuitry which drives the STBY_COM! on the amplifier module.
  In case the MUTE signal is 'high' for more than 15 seconds, the STBY_COM! becomes 'low' and the receiver is switched to standby mode (see wireless mode).

9.12.4 Amplifier

This module can be used in two modes:

- Wireless mode
- Wired mode

9.12.4.1 Wireless mode

The amplified surround audio signal at the clickfits (diagram H2) can also be wired to the master box.
The input from the receiver is present at pin 2 of connector 1262 and fed via the emitter of TS7268 to the input of the amplifier. This signal can be connected to ground by TS7269 in case the STBY_COM! signal 'low' is. Pin 5 of 1262 is the mute pin.
When the MUTE is 'high', TS7270 conducts and pin 3 of comparator IC7262A becomes lower as the V_{REF} at pin 2 (4V6). As a result C2280 discharges via R3280. In wireless mode, the V_{REF} at pin 6 of IC7262B is 6V, and so it takes 15 seconds before pin 5 becomes lower as pin 6 of IC7262B. So in case the mute from the receiver is active for 15 seconds, by then the STBY_COM! will become 'low' and will switch the system to standby.

9.12.4.2 Wired mode

In case of wired use the switch in the cinch connector is open and so the supply voltage for the receiver at pin 3 of 1262 is not present any more. The audio signal - via pin 2 of plug 1260 - is fed to the AUDIO-IN! signal and to the low-level detector.
In wired use, the mute signal from the receiver-module should be disabled. If there is no voltage on pin 3 of 1262, pin 5 of 1262 will be forced high by R3305 and D6275 which means a mute state. This will force TS7270 in conduction as long as the wired mode is active. In this way D6276 is blocked and so the receiver-mute is disabled.
In the wired mode, a low-level detector is used, made by the circuitry around IC7260B and TS7260A. IC7260B and IC7206A are used as amplifier. The voltage divider R3320 and R3321 is used to limit the input signal to IC7260. C2269, C2295 and C2289 are used to block the DC-components. Via D6271 and D6272 only the positive pulses are fed though to pin 3 of comparator IC7262A. Only in case the audio level at the input of the low-level detector is lower as 3mV-RMS, pin 3 of comparator IC7262A becomes lower as the V_{REF} (4V6) at pin 2 and so the output at pin 1 IC7262A becomes 'low'.
As long as the input of the low-level detector is lower as 3mV-RMS, output pin 1 of IC7262A is 'low' and so C2280 is discharged via R3280. In case of a wired mode the threshold-level of comparator IC7262B is increased by a current through D6266 and R3277. As a result in wired mode the threshold level at pin 6 is decreased to 1V3. Therefor it takes 90 seconds before the discharged C2280 becomes lower than pin 6 of IC7262B. So only in case of 90 seconds no (or too low) sound, the STBY_COM! becomes 'low' and will switch the system to standby.

9.12.4.3 Amplifier

- IC7267 is the amplifier for both the master and the slave loudspeaker. It has an output power of 2x8W.
- To ensure a proper start up of the amplifier IC from standby to normal operation, pin 1 is used.
  Pin 1 filters the supply voltage at pin 12.
  * In normal operation STBY_COM! and so pin 6 of the IC is 'high' and so internally pin 12 is connected to pin 1.
  * In standby pin 6 is 'low' and so pin 12 is not connected any more to pin 1. During standby C2286 is precharged via the high STANDBY. This is done to realise a fast built up of the voltage at C2286 when the set is going from standby to normal operation in case of a bad charging of C2286 through IC7267.
- D6265 is used to charge C2282 to avoid plops at switching on.
- From normal operation to standby the following takes place in time:
  * Main supply of transformer L5513 is switched off inmediately, but C2314 is still charged.
  * Then C2290 is charged by the 'low' STBY_COM! signal and so - via the conducting TS7269 and TS7268 - the AUDIO-IN signal is muted.
  * Then C2284 is discharged by the 'low' STBY_COM! signal and so the standby pin 6 of amplifier IC7267 becomes 'low'. The amplifier is switched off after the AUDIO_IN is muted to avoid plops.
  * Then C2314 of the main supply is discharged and only the supply of L5312 is supplying energy to the stabiliser 7275.

DualScreen

9.13 Introduction

The wide picture version of the MD2.2 chassis can be provided with the DualScreen feature. In this there are two variants which can be distinguished:

- In the most basic version TXT or nexTView can be displayed next to the main picture. This is called 'text DualScreen'.
- In a higher specified sector it is possible, in addition to this, to display two video pictures simultaneously next to each other on the screen. This is called 'Video DualScreen'. When combined with text DualScreen this is designated as 'full DualScreen'.

Text DualScreen (video/TXT or video/nexTView)

The picture is divided into two, in a horizontal ratio of 60/40. These two parts are filled as follows:

- The video information is compressed horizontally and pushed left to the left-hand 60% of the picture by means of the PANIC on the Feature Box.
- The TXT or nexTView information is compressed horizontally and pushed right to the right-hand 40% of the picture by means of a circuit on the TXT+control module.

The total picture is further compressed vertically by means of the DDP.

Video DualScreen (video/video with sound of the second video picture on the headphones plug)

Two different video pictures are displayed next to each other in a horizontal ratio of 50/50, whereby the sound of the second video channel is fed to the headphone plug. This is achieved using the so-called 'video DualScreen' and 'YUV interface' modules and modified Dolby Audio Module:

- The 1fH YUV main signal is branched off immediately after TDA9143 on the SSP via the YUV interface panel and is fed to the Video DualScreen module.
- The 1fH YUV sub-signal from the second video picture is created on the Video DualScreen module by means of a 2nd tuner, an MF-demodulator and a TDA 9143.
- The YUV main and sub-signals are placed next to each other in the PIPO (Picture In Picture Out). The YUV output signal (YUV-DW) is still always on the base of 1fH and is fed back to the YUV interface. There is a YUV switch on the YUV interface:
  * If the Video DualScreen feature is not activated, the YUV main signal from TDA9143 on the SSP is immediately looped through to the Feature Box.
  * If the Video DualScreen feature is activated, the YUV-DW signal is fed to the Feature Box.

If the Video DualScreen feature is activated, the sound of the second video channel is fed to the headphones plug via a modified Dolby Audio Module.

9.14 Text DualScreen

9.14.1 Horizontal compression of the TXT/nexTView information (Fig. 9.14)

Principle

- SK1 and SK2 are components of the Blending circuit (see chapter Video Processing).
- The TXT information is compressed by the RGB info to be written into a memory and then read out on a double frequency.
- In order to be able to display the TXT information in the 40% screen, all level 2.5 features, including the side panel feature, are switched off by the software. The maximum number of characters which can be displayed per line is reduced from 56 to 40. Since nexTView also makes use of these possibilities it also has the result that the layout of this is modified in nexTView DualScreen mode.
- In order to set the analogue RGB signals at the correct digital level for the memory IC7462 (after all, this IC can only process digital information), an additional buffer has to be fitted between IC7462 and the TXT-IC, IC7400, namely IC7461. Because IC 7461 also inverts the signal, then after reading out from IC7462 an inverter IC7463 is used in order to 'straighten' the signal again.
- Because IC7461 discriminates the RGB (and FBL) level to high or low (no longer any interim steps) TXT level 2.5 colours (32 colours) is automatically returned to TXT level 1.5 colours (8 colours) if text DualScreen is active.
- With the DWE (Double Window Enable) switch line, originating from the operating mP, a selection is made between a complete TXT/nexTView picture or a DualScreen. If DWE is low, the text DualScreen is displayed.

Ciruit description

Remark:
Due to the software suppression of level 2.5 features in DualScreen mode, then not only will the side panel feature be switched off but also the background colours, DRCS, etc.

Writing to and reading out of the memory

- The TMS4C1050B (IC7462) is a 4 bit organized memory. This memory is addressed via 2 independently operating reading and writing address counters. In addition to this the IC has a separate data write bus A and a separate data read bus B.
- The D0, D1, D2, D3 inputs are used to write the Blanking and RGB signals into the memory. The following signals are used to control the writing section:
  * **W**rite enable (W) releases the write address counter and gives permission for data to be written into the memory.
  * **R**e**S**e**T** **W**rite (RSTW) provides a reset for the write address counter.
  * **S**erial **W**rite **C**loc**K** (SWCK) is a clock signal which determines the writing speed of the memory.
- The Q0, Q1, Q2, Q3 outputs are used to read out the Blanking and RGB signals from the memory.
  The following signals are used to drive the reading section:
  * **R**ead enable (R) releases the read address counter and gives permission for data to be read out of the memory.
  * **R**e**S**e**T** **R**ead (RSTR) provides a reset for the read address counter.
  * **S**erial **R**ead **C**loc**K** (SRCK) is a clock signal which determines the reading speed of the memory.

In text DualScreen the frequency of the read clock is double that of the write clock.

Creating the clock signals in order to be able to read and write in the Field Memory

In order to provide the memory IC, IC7462, with the required clock pulses, the following circuits are made:
- The TXT-IC gives pin 39 a TCASIN with a frequency of 12 MHz with its harmonic. A band pass filter, with an adjustable coil L5465, only allows the 2nd harmonic to pass. This 24 MHz is used directly as a read clock (SRCK). In order to obtain a synchronous running writing clock (SWCK) which is exactly half the speed of the read clock, the signal is driven through a 2 divider IC7465/A.
- The TXT/IC delivers on pin 3 a line frequency pulse with a duty-cycle of exactly 50% (signal PL). This pulse is used as the clock input for the 2nd flip flop IC7465/B. The vertical flyback pulse (VFB) arrives on the D input. A reset read (RSTR) and a reset write (RSTW) are therefore generated at raster frequency. Since there is a time difference between the two trigger points (rising slope) of these reset signals, the 12 MHz clock is held up to the START moment. In this way the writing and reading are exactly synchronized.
- At the START moment the RSTR is high. As a result of this the 12 MHz write clock is released and the writing into the memory begins. This is exactly at the rising PL slope. The writing is now no longer interrupted until a further frame flyback. A full raster is therefore written into the memory.
- The reading of the memory is stopped just at the moment of START (Read enable is low). Only in the second half of the PL pulse (this is a half line time later) does the Read Enable become high. As a result of this the read address counter is released and the reading out of the memory starts. Since the read address counter is running at 24 MHz clock this reading out runs twice as fast as the writing. Another half a line time later the Read Enable again becomes low and reading out stops again.
  This cycle repeats itself for each line.
  * During the first half of the line the PL is high, the read enable (R) is therefore low; nothing is therefore read out.
  * During the second half of the line the PL is low and the memory is read out at double speed (24 MHz clock)

9.14.2 Horizontal compression of the video information

In addition to the compression of the TXT/nexTView section, the video section of the picture should also be compressed. For text DualScreen this horizontal compression is achieved by the PANIC IC in the FBX. Via a software command the picture is compressed in the PANIC and pushed horizontally to the left.

9.14.3 Horizontal centring of text DualScreen

In order to arrange the video and TXT/nexTView information neatly at the correct distance beside each other, initially the TXT/nexTView half on the right is set against the side of the picture by the DDP. After this, by means of the software centring of the FBX, the video half is set to the correct horizontal distance with regard to the TXT/nexTView information.

9.14.4 Vertical compression of the text DualScreen picture

The total picture for text DualScreen is compressed vertically with the aid of the DDP (vertical deflection is adjusted) in order to again obtain the correct height/width ratio of the video picture. As a result of this black bars are created on the top and bottom of the picture.

9.15 Video DualScreen

9.15.1 Introduction

The video DualScreen picture consists of 2 sections of the same size:
- the left-hand section is the main picture originating from the main tuner or from RGB, CVBS or SVHS signals from external sources.
- the right-hand section is the sub-image originating from the 2nd tuner or from CVBS or SVHS signals (no RGB signals) from external sources. The video decoding for the sub-image takes place on the Video DualScreen module and makes no use of the COMB filter. The result is that the picture quality of the sub-image is generally less than that of the main picture.

9.15.2 Block diagram

The following blocks can be distinguished on the Video DualScreen:

- PLL tuner E9F1 is a UV1216D which is driven via I^2C.
- A TDA9815 is used for MF demodulation.
  The PCF8574AT controller IC9N is used in order to set the switching signals from the MF demodulator into the correct mode.
- Via a source selector IC9L a selection is made between TUN_CVBS (from the Video DualScreen tuner) or CVBS PIP (from the TEA6415 source selector on the SSP). At the same time this IC9L can be used to select between CVBS-PIP or YC-PIP.
- The Y/CVBS-PIP or CVBS TUNER signal and the C-PIP signal are fed to the TDA9143 IC9J on the Video DualScreen module. Together with the delay line IC9K the CVBS or SVHS signal is converted here to the SUB-YUV signals together with the sync signals SPHsync and SPVsync. The RGB-TXT inputs of this TDA9143 are not used here.
- The sub-YUV signals (SY, SU, SV) together with their sync signals SPVsync and SPHsync and the Main-YUV signals (MU, MY, MV) with their sync signals HA = SC_1fH = DPVsync are placed next to each other in the PIPO (Picture In Picture Out) IC9A SAB9077. The RAM IC9E is used as the memory.
- The output of the SAB9077 DW-YUV signals (DY, DU, DV) are fed directly to the output of the Video DualScreen panel to the YUV interface (in the MD2.2 the function of the switching IC IC9M is on the YUV interface, therefore IC9M and the switching signals DFB1 and DFB2 are not used). Via the switching signal FBLK the YUV interface can be set to the bypass mode (FBLK 'low') or to the Video DualScreen mode (FBLK 'high').
- If the Video DualScreen feature is not active, part of the +5V supply voltages (+5VSW) is switched off via Q9N1 and switching signal VDS STANDBY (VDS STANDBY becomes 'low' (standby mode) 60 seconds after the VDS feature is switched off. As a result of this the load of the +5V supply voltage reduces if the Video DualScreen feature is not used. Because the PIPO is also switched off, then via IC9P and VDS TSNADBY = 'low', the HA and VA sync signals are not looped through to the HA' and VA' sync signals which go to the PIPO. This prevents the non-active PIPO loading the HA and VA signals.
- Because the TXT/nexTView DualScreen are created by a totally different signal path in the MD2.2, connector J9A5, J9A6, the buffers around Q9P1, Q9R1 and Q9S1 and the section of pin 12, 13, 14 of IC9L are not used.

9.15.3 Tuner and MF section

The tuner is an I^2C controlled PLL tuner with built-in splitter. The antenna input goes to the Video DualScreen module and is split there into the main and Video DualScreen tuner. The D_TUN pin 8 is the supply for the splitter section. The ADDRESS pin 15 is used to give this tuner a different address on the I^2C bus of the main tuner.

The MF section can handle all of the systems throughout the world and is constructed around the MF demodulator IC9R, the TDA9815 (also used in GR2.4). This is, with regard to pinning, the same as the TDA9811 of the MD2 MF module, however, in the TDA9815 an FM demodulator is built in. In order to select the correct demodulation system and the correct filtering, the following switching signals are used. These switching signals originate from the PCF8574AT IC9N.

System	BG/LL'IMDK	L'	I	POS/NEG	M
BG	1	0	0	1	0
L	0	0	0	0	0
L'	0	1	0	0	0
I	0	1	1	1	0
M	0	0	0	1	1
DK	0	0	0	1	0

The video path

- *BG via SAW filter FL90*
  BG/LL'IDKM is 'high', D9G0 conducts, D9G1 reverses. As a result of this IF2 becomes short-circuited and IF1 is fed to the Video IF inputs pin 1 and 2 of the TDA9815 via the BG SAW filter FL90.
- *LL'IDK via SAW filter FL91*
  BG/LL'IDKM is 'low', D9G0 reverses, D9G1 conducts. As a result of this IF1 becomes short-circuited. Because M-TRAP is 'low', D6G2 reverses and D9G3 conducts as a result of which the IF2 is fed to the LL'IDK SAW filter FL91.
  At the same time D9G5 conducts and D9G4 reverses because M-TRAP is 'low'. As a result of this pin 4 and 5 of FL92 (M SAW filter) become short-circuited and pins 5 and 4 of FL91 (LL'IDK SAW filter) are not short-circuited. Therefore, pins 5 and 4 of FL91 are looped through to pins 4 and 5 of TDA9815 respectively.
  The circuit around L9F2 filters out the sound at 40.4 MHz from the adjacent channel.
- *M via SAW filter FL92*
  BG/LL'IDKM is 'low', D9G0 reverses, D9G1 conducts. As a result of this IF1 becomes short-circuited. Because M-TRAP is 'high', D6G2 conducts and D9G3 reverses as a result of which the IF2 is fed to the M SAW filter FL92.
  At the same time D9G5 reverses and D9G4 conducts because M-TRAP is 'high'. As a result of this pins 4 and 5 of FL91 (LL'IDK SAW filter) are short-circuited and pins 5 and 4 of FL92 (M SAW filter) are not short-circuited. Therefore, pin 4 and 5 of FL92 are looped through to pins 4 and 5 respectively of the TDA9815.
- Pin 30 selects the MF inputs: 'high' for the BG VIF inputs pin 1-2 and 'low' for the LL'IDKM VIF inputs pin 4-5.

- In order to filter sound from the Video IF (VIF), the series connected band reversing filters X9T4, X9T5 and X9T6 are used. X9T4 is only connected in series in the M mode (M-TRAP 'high' therefore Q9F5 reverses and Q9F6 conducts). Pin 21 is the output, pin 22 the input. Finally, the buffered TUN-CVBS signal is present on pin 10.
- AFC oscillator between pins 23 and 24 which is adjusted to 77.8 MHz (2 x 38.9 MHz). The adjustment takes place via pin 23 of the AFC detector. The AFC loop of the Video DualScreen demodulator is not used. The AFC loop of the main demodulator on the IF module of the set itself is used to correct any drift of the transmitter for both the main tuner and for the Video DualScreen.
- Pin 9 is 'high' for BGIDKM (negative modulation) and 'low' for LL' (positive modulation).
- Pin 11 is 'low' in the L' mode (L' 'high') or in the M mode (M-TRAP 'high') via Q9F1. A low pin 11 is interpreted in the positive modulation mode (pin 9 'low') in order to de-tune the 38.9 MHz to 32.4 MHz. In the negative modulation mode (pin 9 'high') a low pin 11 is interpreted in order to select sound input pin 18 (M audio input) instead of the sound input pin 17 (BGLL'IDK audio input).
- Pin 7 is switchable for the PLL loop filter. For BGIDKM, R9H9 is short-circuited via Q9F2 as a result of which the time constant is changed.
- Pin 6 is used in order to adjust the AGC takeover point via R9H5.

The sound path

The TDA9815 delivers an FM mono or AM mono. Via L9F8 the sound path is disconnected from the picture path.

- *BG via SAW filter FL93*
  L' is 'low', D9G8 conducts, D9G9 reverses, pin 6 of the L9F8 is short-circuited via C9T5. Therefore, the MF signal from the tuner is fed via pin 4 of L9F8 to pin 1 of FL93 (BG SAW filter) and pin 2 of FL94 (LIDK SAW filter). Because BG/LL'IMDK is 'high', D9G6 conducts and D9G7 reverses. As a result of this pins 4 and 5 of FL94 (LIDK SAW filter) are short-circuited and pins 5 and 4 of FL93 (BG SAW filter) are not short-circuited. Pins 5 and 4 of FL93 (BG SAW filter) are looped through to pins 31 and 32 of TDA9815 respectively.
- *LIDK via pin 2 SAW filter FL94*
  L' is 'low', D9G8 conducts, D9G9 reverses, pin 6 of the L9F8 is short-circuited via C9T5. Therefore, the MF signal from the tuner is fed via pin 4 of L9F8 to pin 1 of FL93 (BG SAW filter) and pin 2 of FL94 (LIDK SAW filter). Because BG/LL'IMDK is 'low', D9G6 reverses and D9G7 conducts. As a result of this pins 5 and 4 of FL93 (BG SAW filter) are short-circuited and pins 5 and 4 of FL94 (LIDK SAW filter) are not short-circuited. Pins 5 and 4 of FL94 (LIDK SAW filter) are looped through to pins 32 and 31 of TDA9815 respectively.
- *L' via pin 1 SAW filter FL94*
  L' is 'high', D9G8 reverses, D9G9 conducts, pin 4 of the L9FB is short-circuited via C9T5. Therefore, the MF signal from the tuner is enabled via pin 6 of L9F8 to pin 1 input of FL94 (L' SAW filter). Because BG/LL'IMDK is 'low', pins 4 and 5 of FL94 are looped through to pins 31 and 32 of TDA9815 respectively.
- *M sound inter-carrier*
  In M mode the sound inter-carrier is processed, therefore the sound is extracted from the VIF information. Because the sound path is not used it is disabled by Q9F7.
- In order to filter the sound signal (SIF) from the picture the band reverse filters X9T0, X9T1, X9T2 and X9T3 are used. Pin 20 is the output, pin 18 the input for M sound and pin 17 the input for BGLL'IDK sound. Filter X9T1 (6.0 MHz) is switched off in the BG mode in order to prevent any NICAM BG carrier (5.85 MHz) from passing and filter X9T2 (6.5 MHz) is switched off in the I mode in order to prevent any NICAM I carrier (6.552 MHz) from passing.
- Pin 12 is the DW-MONO output. Via Q921 the de-emphasis for BGIDKM can be modified and additionally modified for M via Q922.

9.15.4 MultiScreen with the PIPO

In a set with the Video DualScreen module, Multi PIP is no longer created but MultiScreen is created with the aid of the PIPO SAB9077. In the MD2.2 the following configuration is selected:

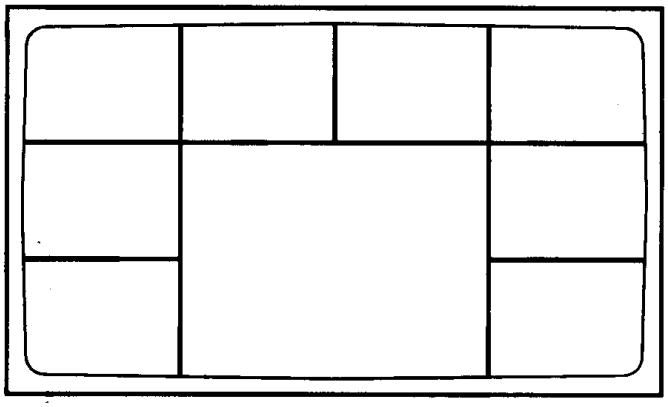

76532013_010.AI
060397

For this the large picture is the main picture from the main tuner. The 8 small pictures are created by the Video DualScreen tuner. At the same time a scan or photofinish can be created with the 8 small pictures, for which the picture at the bottom right is the live picture.

Blockschaltbild nicht Top-Dolby-Version /

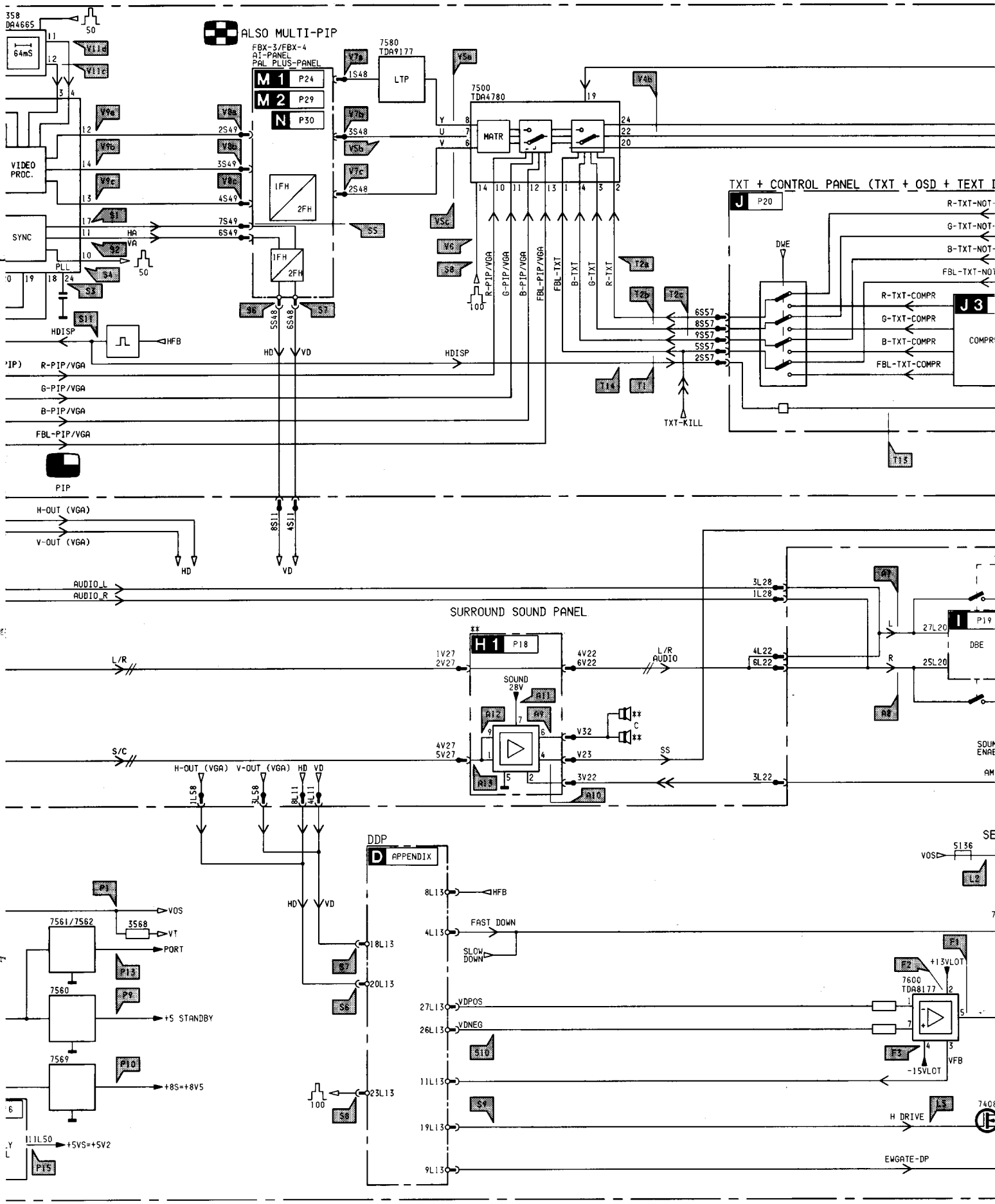

Diagramme synoptique version non Top-Dolby

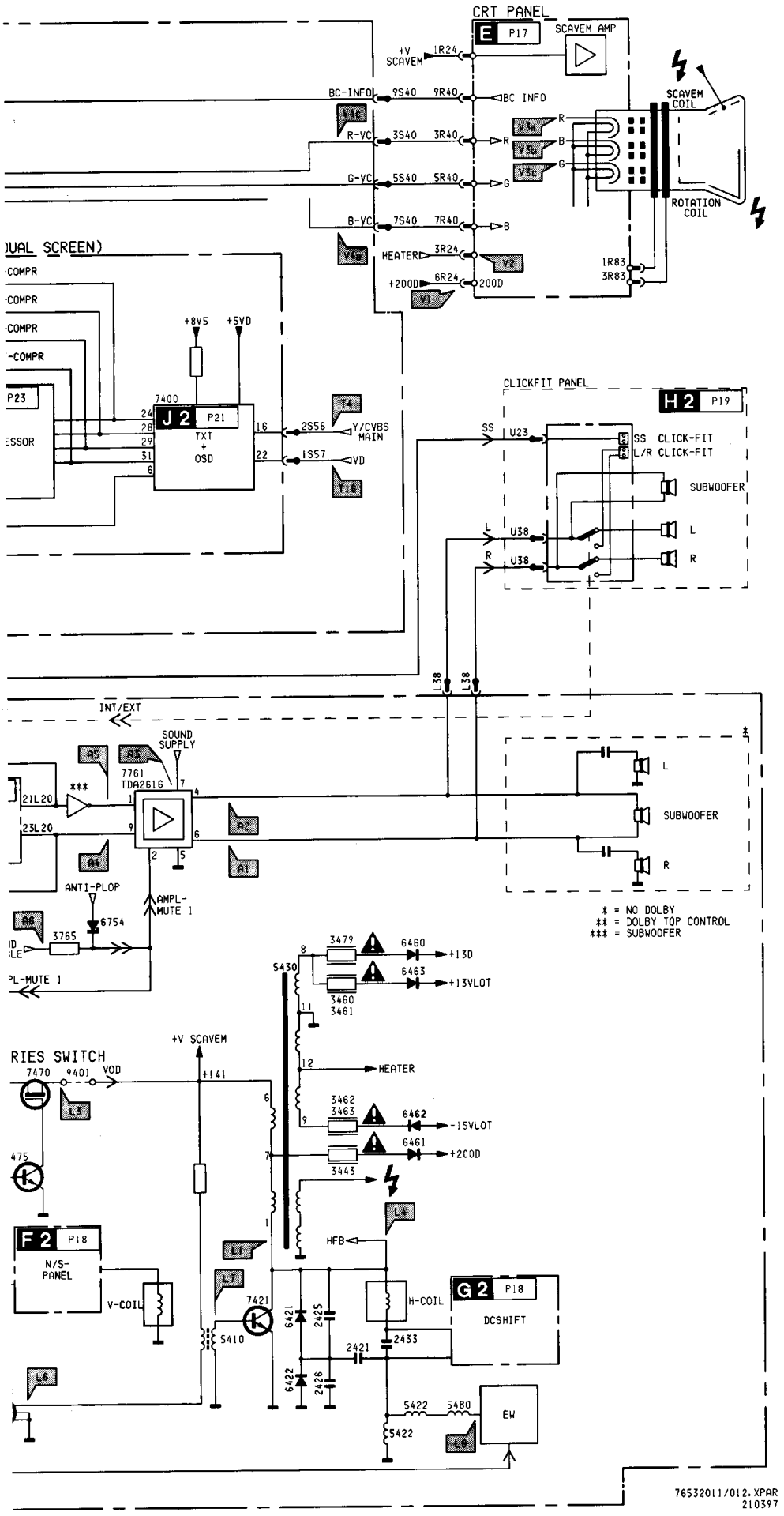

Block diagram Top-Dolby version (front control styling) /

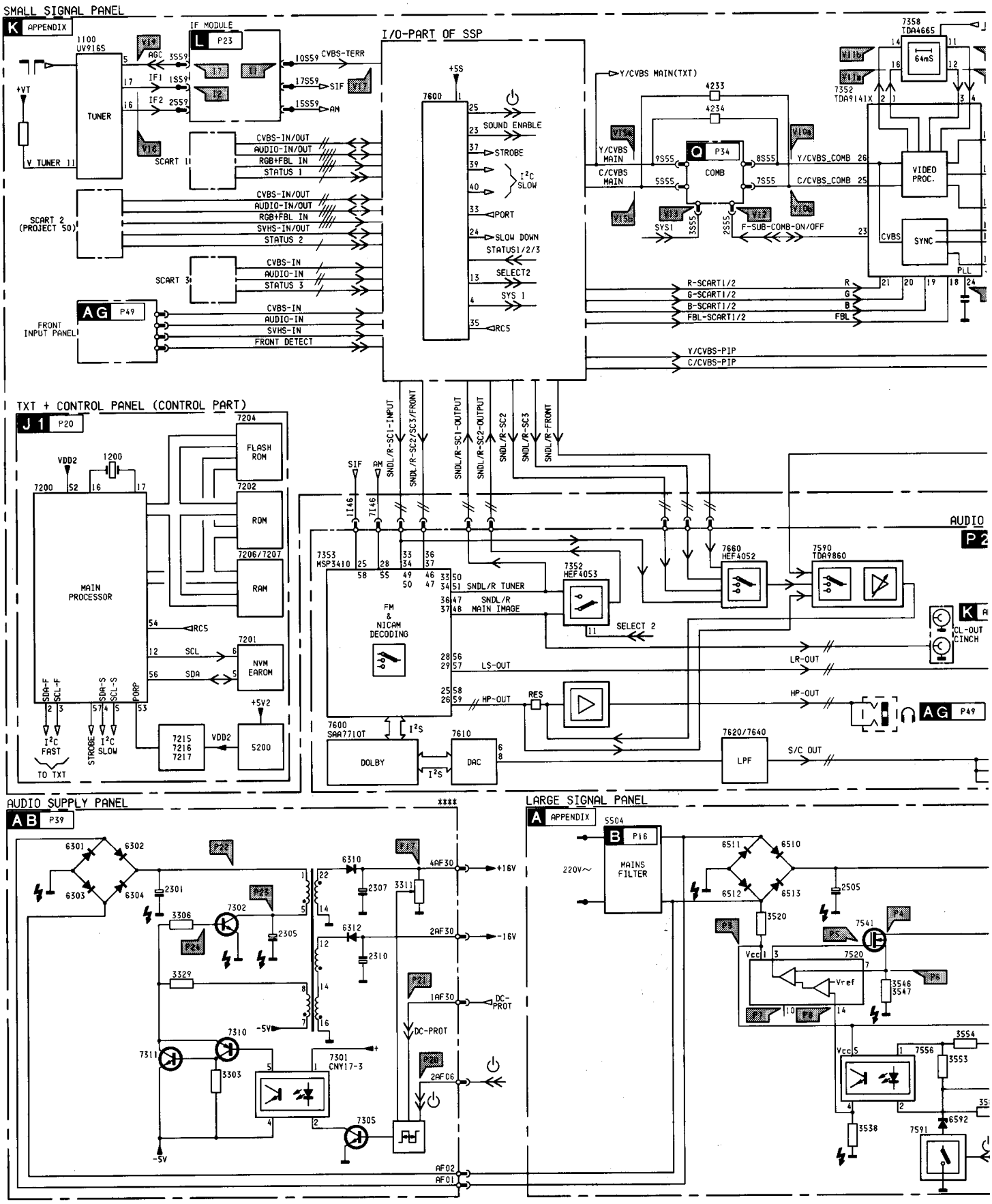

Blockschaltbild der Top-Dolby-Version /

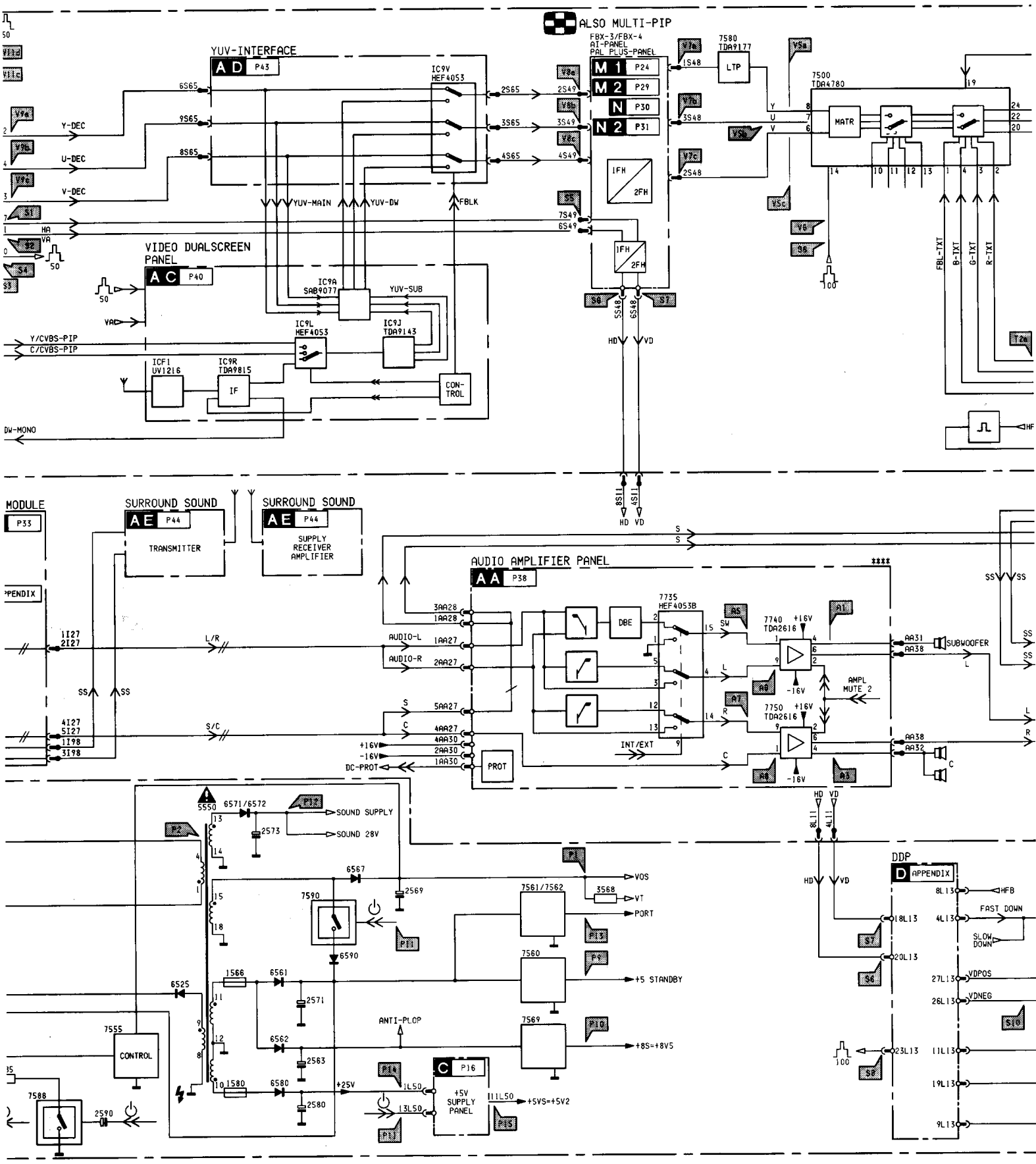

Diagramme synoptique de la version Top-Dolby

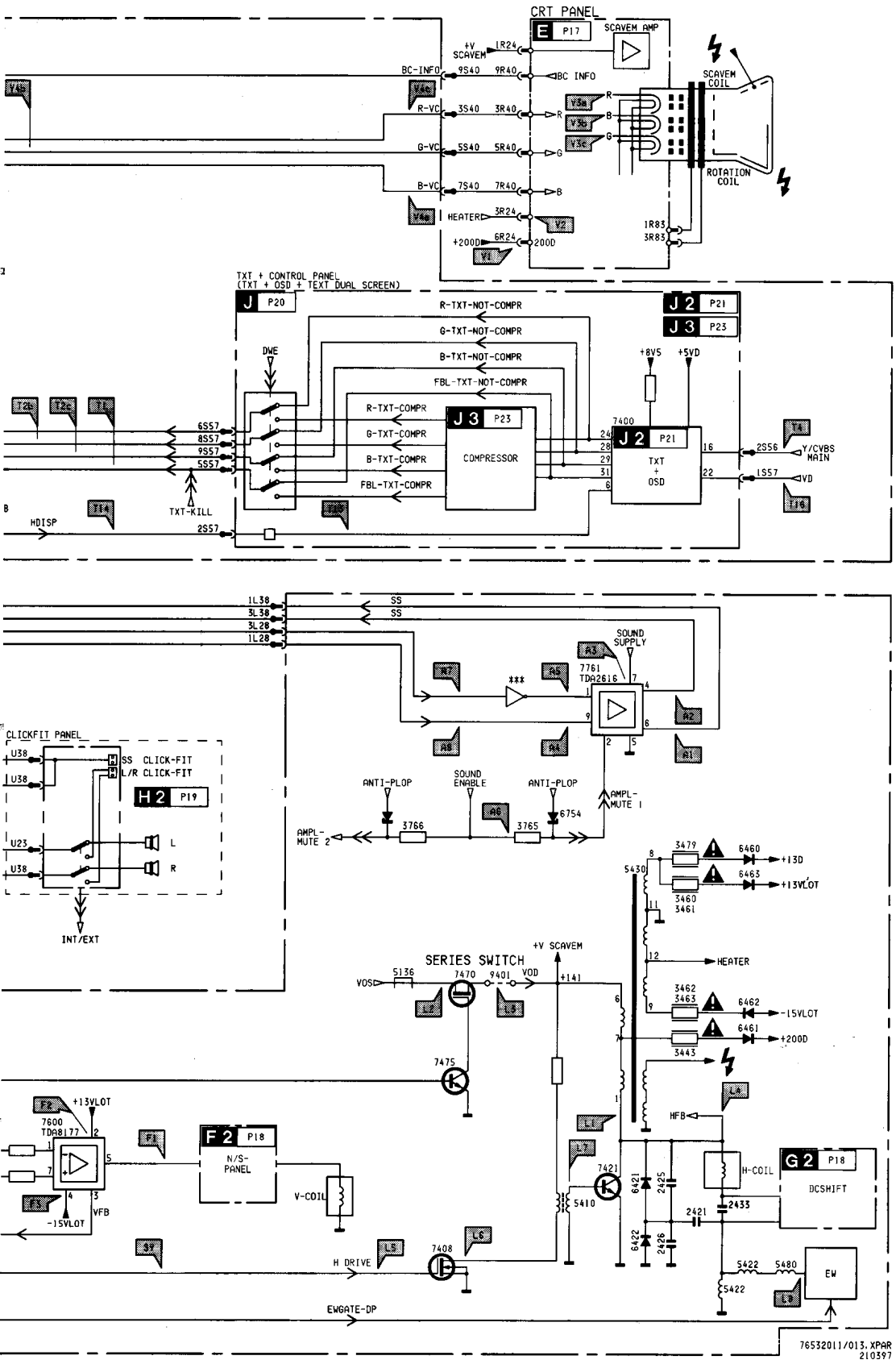

002	K6	7480	D4	3523	I9	5567	F6	9427	I5	9618	D3	2596	D7
003	D3	7507	M9	3525	I9	5572	F7	9428	H3	9619	A4	2601	B1
004	B8	7520	I9	3526	I9	5573	D10	9429	H4	9620	A2	2609	C5
005	F7	7541	J7	3527	I9	5617	E2	9431	H2	9621	C2	2612	D1
1503	N7	7556	H10	3529	K8	5701	B8	9432	I2	9622	D2	2613	D1
2400	G4	7560	E9	3530	J10	6409	N3	9433	H3	9624	A4	2614	D2
2418	L5	7569	B9	3531	K9	6410	N4	9435	G2	9749	A9	2615	C3
2419	K5	7590	E7	3532	L10	6411	N5	9436	I2	9750	B6	2616	D1
2420	K5	7600	D1	3533	K10	6425	I3	9440	K4	9751	A8	2617	E1
2421	G3	7761	B6	3534	K10	6426	I3	9441	K4	9752	A8	2618	D2
2422	F3	L01	N8	3535	I10	6441	L2	9442	C2	9753	B10	2620	E2
2425	J4	L02	M10	3536	I10	6451	B4	9443	C3	9754	A9	2630	B5
2426	H5	L04	M7	3537	I10	6452	C3	9444	F1	9755	A8	2750	C8
2428	I4	L06	C10	3538	H10	6453	M3	9445	H3	9756	A8	2751	A10
2432	H3	L07	D10	3539	I10	6454	M3	9446	H3	9758	N7	2752	A10
2433	H3	L10	E10	3541	J7	6460	J1	9447	E3	9759	A9	2753	B6
2434	H5	L11	A5	3546	K7	6462	G2	9450	M3	9760	B8	2754	C7
2442	L2	L13	A4	3547	K7	6463	G2	9451	I2	9761	B10	2756	A6
2450	M2	L15	A3	3548	I9	6465	G4	9453	J1	9762	B8	2761	B6
2452	M2	L17	L4	3549	H9	6466	M2	9456	H2	9767	N7	2762	B7
2453	M2	L20	C8	3550	H9	6471	G5	9458	L1	9781	B6	2763	B7
2466	F2	L22	A9	3551	H9	6479	D4	9460	I2	9782	D8	2776	A6
2478	E5	L24	M1	3552	K10	6480	C4	9461	H2	9786	B10	2778	A7
2505	L8	L25	C1	3553	F9	6481	C4	9462	H1	1440	E2	2787	B7
2506	M10	L28	B10	3554	E9	6482	D4	9463	F2	1566	G8	2788	A6
2509	M9	L38	A8	3555	F10	6483	E3	9465	B4	1572	G8	3401	F4
2540	K7	L39	A8	3556	G10	6506	M9	9466	C4	1580	G8	3402	F4
2542	I7	L50	E8	3557	G10	6507	J8	9470	G5	2401	F4	3443	L1
2543	J7	L58	A1	3558	G10	6508	M9	9471	F6	2402	N3	3460	H2
2544	J7	L91	H3	3560	F9	6509	L9	9472	B5	2409	A4	3461	G2
2550	H9	L93	H4	3561	F9	6510	M7	9473	B5	2410	M3	3462	H1
2561	D8	2504	L7	3562	G6	6511	M6	9475	B5	2411	N4	3463	H1
2563	F7	2531	J10	3563	E9	6512	M8	9476	F4	2412	N4	3479	J2
2566	D8	3407	N3	3564	C7	6513	M8	9477	H4	2413	N4	3502	I8
2567	G6	3409	N2	3565	E9	6514	L9	9478	E4	2417	M5	3513	M9
2568	G6	3411	M4	3566	E9	6515	K9	9479	E5	2424	I3	3524	K8
2569	H6	3412	M4	3568	E10	6516	K9	9481	E3	2431	I4	3543	I8
2573	E6	3413	N3	3569	E9	6518	I9	9482	D4	2435	H3	3559	F10
2580	F8	3414	B4	3570	G7	6524	K9	9508	J8	2440	L2	3609	C5
2755	C7	3416	N2	3571	D9	6525	J8	9509	F10	2448	C4	3617	F1
2765	A7	3417	M4	3572	F9	6540	K7	9510	D9	2457	C4	3622	B2
2766	B8	3418	M4	3579	J10	6541	K7	9520	I10	2460	J1	3752	A6
2767	A7	3419	J5	3582	D9	6542	I7	9522	K8	2461	I1	3753	C6
2768	B8	3425	H5	3583	D7	6545	J6	9523	K8	2462	F2	7408	N4
3400	G3	3426	H4	3584	F9	6548	I8	9525	I9	2463	G2	7409	N3
3408	N5	3430	J4	3585	F9	6550	G10	9526	I9	2465	G1	7512	L8
3410	N5	3431	J4	3586	F9	6560	F8	9530	J10	2467	E5	7513	L9
3415	N1	3434	I3	3587	F9	6561	F8	9536	H9	2468	G5	7514	L9
3423	I5	3435	I3	3588	E9	6563	D8	9537	H10	2480	E4	7515	L10
3453	M3	3448	B4	3589	E7	6564	A6	9543	F7	2481	C4	7555	G10
3478	L1	3449	C3	3592	G9	6566	K7	9544	H9	2482	C5	7561	E9
3503	M6	3450	M1	3593	E6	6569	C10	9545	I7	2503	J8	7562	E10
3505	M6	3451	M2	3594	D7	6576	D8	9551	G8	2507	J8	7588	E10
3506	N9	3452	M2	3595	D7	6577	E7	9552	H9	2508	L9	7589	F9
3507	N10	3457	B4	3596	D9	6581	F8	9557	F6	2511	M7	7591	G9
3528	M9	3458	C4	3597	G9	6590	E6	9560	D10	2512	M8	7592	D6
3544	I7	3459	M3	3598	F9	6591	D7	9561	F6	2513	L9	7770	C8
3545	K6	3465	B5	3599	E6	6592	G9	9562	E7	2514	K9		
3567	F6	3466	C5	3601	C1	6614	E2	9563	D10	2521	J9		
3573	D6	3467	D5	3602	C1	6617	C2	9564	G6	2522	J9		
3574	D6	3468	G5	3603	C1	6618	C2	9565	D9	2524	I9		
3575	C6	3469	L1	3610	C2	6620	E2	9569	C10	2525	I8		
3590	E6	3470	F5	3611	C1	6753	B9	9571	F6	2526	H8		
5400	G5	3471	F5	3612	B2	6754	C9	9572	F7	2527	I8		
5401	G4	3472	D5	3613	B3	6755	C8	9573	D6	2528	J9		
5402	H6	3473	D5	3614	B3	6756	C9	9574	D6	2533	K10		
5410	M4	3474	B5	3618	B1	6757	B9	9575	D10	2534	J10		
5411	M5	3475	E5	3619	B1	6770	C9	9576	D9	2535	I10		
5421	I4	3476	F5	3620	F1	9400	F3	9577	D10	2538	H10		
5422	E3	3477	D5	3750	C6	9401	G4	9578	D9	2541	K8		
5423	I5	3480	C4	3751	C6	9402	F1	9579	E7	2545	J6		
5424	F3	3481	C4	3755	A7	9403	C2	9581	J9	2548	H9		
5430	K3	3482	E2	3760	B6	9405	F2	9585	F9	2554	G10		
5460	I2	3483	C3	3761	B6	9406	C2	9592	G8	2555	G10		
5461	H2	3484	C3	3762	B7	9407	F2	9597	D9	2557	G10		
5462	H1	3485	D4	3763	C7	9408	M5	9600	E1	2559	C10		
5480	D3	3486	D4	3764	B7	9409	J2	9601	B3	2560	F8		
5507	M9	3487	B4	3765	C8	9410	N5	9602	B3	2562	H6		
5550	H7	3488	C5	3766	B9	9411	H4	9603	A5	2564	E8		
5750	C6	3489	E3	3770	C8	9412	D5	9604	B2	2565	C10		
5751	C6	3508	L9	3771	C8	9413	A2	9605	B2	2570	G7		
6419	L5	3509	L10	3772	C8	9414	A2	9606	B4	2571	E9		
6421	I5	3510	J8	5418	L5	9415	D4	9607	B4	2572	F7		
6422	H5	3512	K9	5419	L5	9417	M5	9608	B5	2574	E9		
6562	F8	3514	L10	5425	H5	9419	L5	9609	C2	2575	D6		
6567	G6	3515	K10	5426	L5	9420	I4	9610	A2	2581	F9		
6571	F7	3516	K10	5525	I8	9421	K4	9611	E4	2584	F10		
6572	F7	3517	L9	5542	J7	9422	H6	9612	D1	2590	F10		
6573	E6	3518	I9	5543	F7	9423	H5	9613	C1	2591	F10		
7421	L5	3519	K10	5544	I7	9424	H4	9615	A3	2592	D6		
7470	F5	3521	J9	5545	I6	9425	H5	9616	B3	2593	F6		
7475	E4	3522	K8	5561	D8	9426	L5	9617	A3	2594	F7		

POWER SUPPLY

P1 ⏀ (VOS)
140V DC

P1 ⏻ (VOS)
0V DC

P6 ⏻ (DEMAG)

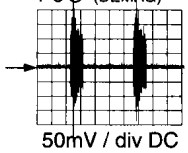

50mV / div DC
0.1s / div

P13 ON-OFF (PORT)

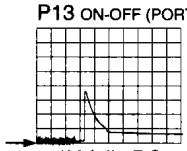

1V / div DC
1s / div

P2 ⏀ (300V)

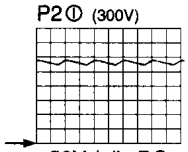

50V / div DC
5ms / div

P7 ⏀ (OSCILLATOR)

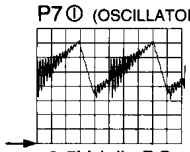

0.5V / div DC
5µs / div

P14 ⏀ (+25V)
27V5 DC

P2 ⏻
300V DC

P3 ⏀ (Vcc IC7520)
14V DC

P7 ⏻ (OSCILLATOR)

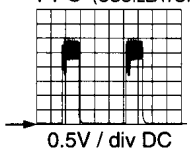

0.5V / div DC
0.1s / div

P14 ⏻ (+25V)

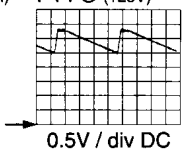

0.5V / div DC
20ms / div

P3 ⏻ (Vcc IC7520)

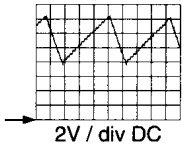

2V / div DC
20ms / div

P8 ⏀ (FEEDBACK)

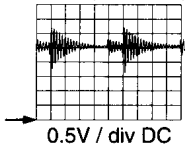

0.5V / div DC
5µs / div

P15 ⏀ (+5S)
25V DC

P4 ⏀ (DRAIN TS7541)

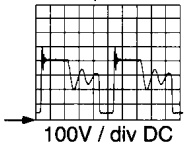

100V / div DC
5µs / div

P8 ⏻ (FEEDBACK)

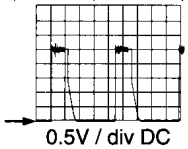

0.5V / div DC
20ms / div

P15 ⏻ (+5S)

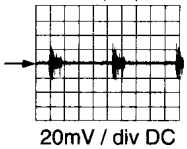

20mV / div DC
20ms / div

P4 ⏻ (DRAIN TS7541)

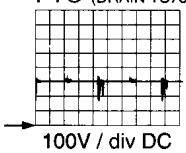

100V / div DC
0.1s / div

P9 ⏀ (+5V STANDBY)
4V9 DC

P9 ⏻ (+5V STANDBY)
4V9 DC

P10 ⏀ (+8S)
8V6 DC

P10 ⏻ (+8S)
0V DC

HORIZONTAL (LINE)

P5 ⏀ (DRIVE)

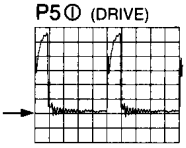

2V / div DC
5µs / div

P11 ⏀ (STANDBY)
3V9 DC

P11 ⏻ (STANDBY)
0V1 DC

P12 ⏀ (SOUND-SUP.)
29V5 DC

L1 (COLL TS7421)

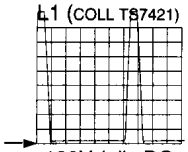

100V / div DC
5µs / div

P5 ⏻ (DRIVE)

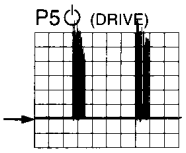

0.5V / div DC
0.1s / div

P12 ⏻ (SOUND-SUP.)
3V DC

L2
(TS7470 series switch)
140V9 DC

L3
(TS7470 series switch)
140V4 DC

P6 ⏀ (DEMAG)

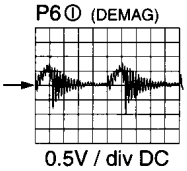

0.5V / div DC
5µs / div

P13 OFF-ON (PORT)

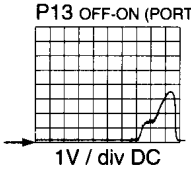

1V / div DC
20ms / div

L4 (HFB)

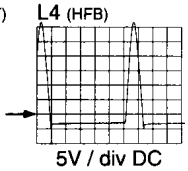

5V / div DC
5µs / div

Overview oscillograms / Übersicht der Oszillogramme /

L5 (HDRISE)
1V / div DC
5 µs / div

SYNCHRONISATION

S9 (HDRIVE)
1V / div DC
5 µs / div

V4b (RGB IC7500)
1V / div DC
10µs / div

V8a (YUV DEC)
0.2V / div AC
10µs / div

V11b -(B-Y)
0.2V / div AC
20µs / div

V18 (IF1)
50mV / div DC
50µs / div

A5 (L
(volume
50m
0.5

L6
50V / div DC
5µs / div

S1 (HA)
1V / div DC
10µs / div

S10 (VDNEG)
0.2V / div DC
5ms / div

V4c (RGB IC7500)
1V / div DC
10µs / div

V8b (YUV DEC)
0.2V / div AC
10µs / div

V11c -(U)
0.2V / div AC
20µs / div

V19 (AGC)
1V9 DC

IF

A6 (S
MUT
MUT
A11 (
27V

L7 (BASE TS7421)
2V / div DC
5µs / div

S2 (VA)
1V / div DC
5µs / div

S11 (HDISP)
1V / div DC
10µs / div

V5a (YUV IC7500)
0.2V / div AC
10µs / div

V8c (YUV DEC)
0.2V / div AC
10µs / div

V11d -(V)
0.2V / div AC
20µs / div

I1 (CVBS_TERR)
0.5V / div DC
10µs / div

A7 (A
(volume
50m
0.5

L8 (EWD)
10V / div DC
2ms / div

S3 (PLL)
50mV / div AC
10µs / div

VIDEO

V1 (+200D)
200V DC

V5b (YUV IC7500)
0.2V / div AC
10µs / div

V9a (YUV DEC)
0.2V / div AC
10µs / div

V12 (FSUB_COMB ON/OFF)
0.1V / div AC
0.5µs / div

I2 (IF1)
50mV / div DC
50µs / div

A8 (A
(volume
0V2
0.5

S4(SC_1FH)
1V / div DC
10µs / div

V2 (HEATER)
5V / div DC
5µs / div

V5c (YUV IC7500)
0.2V / div AC
10µs / div

V9b (YUV DEC)
0.2V / div AC
10µs / div

V13 (SYS 1)
PAL BG = 0V
NTSC M = 5V

I7 (AGC)
1V9 DC

A9 (A
-1KHz r
0V2
0.1

VERTICAL
(FRAME)

AUDIO

F1 (LV+)
10V / div DC
5ms / div

S5 (HA)
1V / div DC
10µs / div

V3a (RGB cathodes)
20V / div AC
10µs / div

V6 (SC_2FH)
1V / div DC
10µs / div

V9c (YUV DEC)
0.2V / div AC
10µs / div

V15a (Y/CVBS_MAIN)
0.2V / div AC
10µs / div

A1 (AUDIO AMP. OUT R)
-1KHz right (incr.volume)
0V2 / div AC
0.1ms / div

A10 (A
-1KHz r
0V2
0.1

F2 (+13V-LOT)
5V / div DC
5ms / div

S6 (HD)
1V / div DC
10µs / div

V3b (RGB cathodes)
20V / div AC
10µs / div

V7a (YUV FBX)
0.2V / div DC
10µs / div

V10a (Y/CVBS_COMB)
0.2V / div AC
10µs / div

V15b (C/CVBS_MAIN)
0.2V / div AC
10µs / div

A2(AUDIO AMP. OUT L)
-3KHz left (incr.volume)
0V2 / div AC
0.2ms / div

A11 (
27V

F3 (-15V-LOT)
5V / div DC
5ms / div

S7 (VD)
1V / div DC
5ms / div

V3c (RGB cathodes)
20V / div AC
10µs / div

V7b (YUV FBX)
0.2V / div DC
10µs / div

V10b (C/CVBS_COMB)
0.2V / div DC
10µs / div

V16 (CVBS)
0.2V / div AC
10µs / div

A3 (SOUND_SUP)
29V5 DC

A12 (
(volume
0V2
0.5

S8 (SC_2FH)
1V / div DC
10µs / div

V4a (RGB IC7500)
1V / div DC
10µs / div

V7c (YUV FBX)
0.2V / div AC
10µs / div

V11a -(R-Y)
0.2V / div AC
20µs / div

V17 (CVBS_TERR)
0.5V / div DC
10µs / div

A4 (R_INPUT) -1KHz
(volume level increased)
0V2 / div AC
0.5ms / div

A13 (S
(volume
0V2
0.5

Vue d'ensemble des oscillogrammes

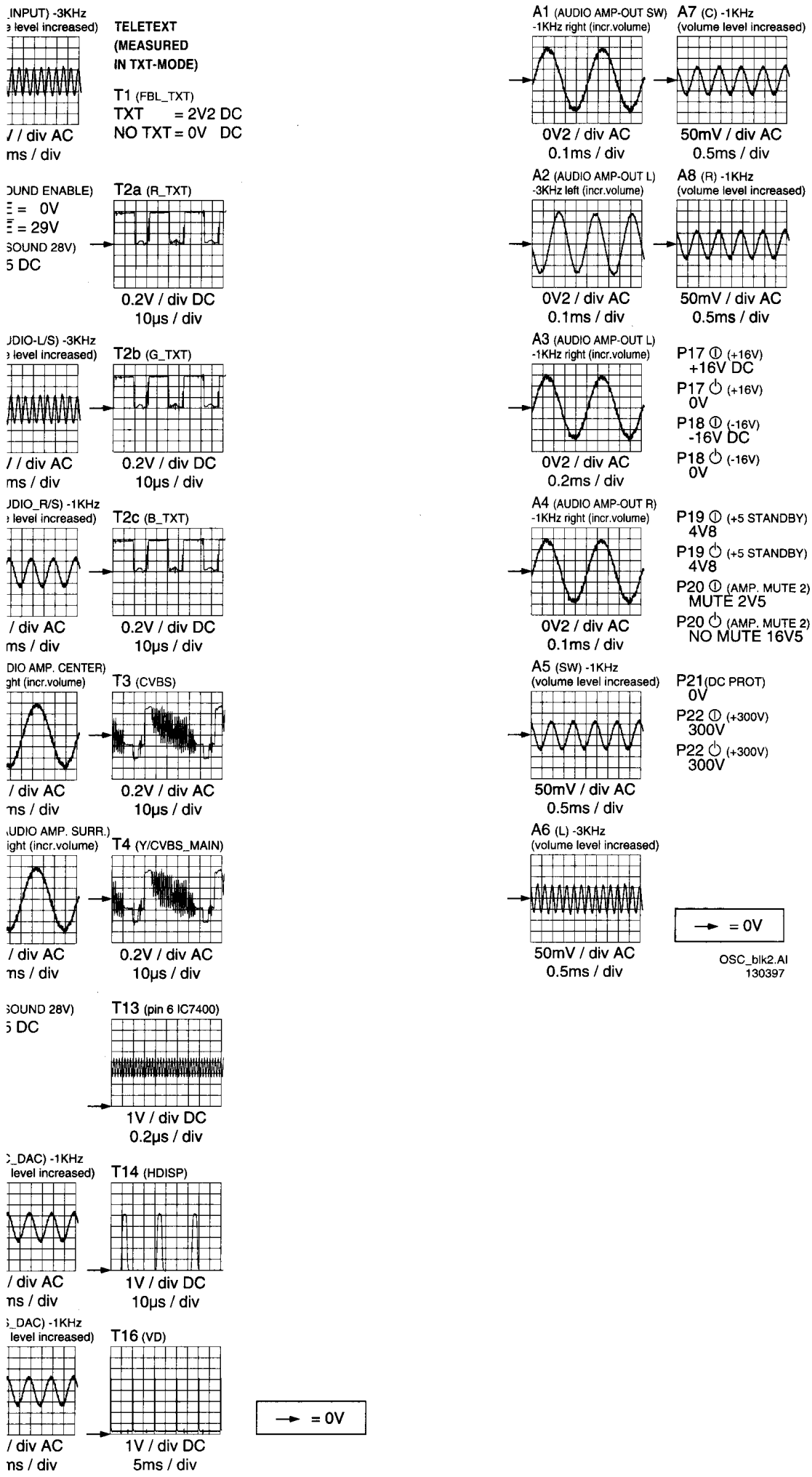

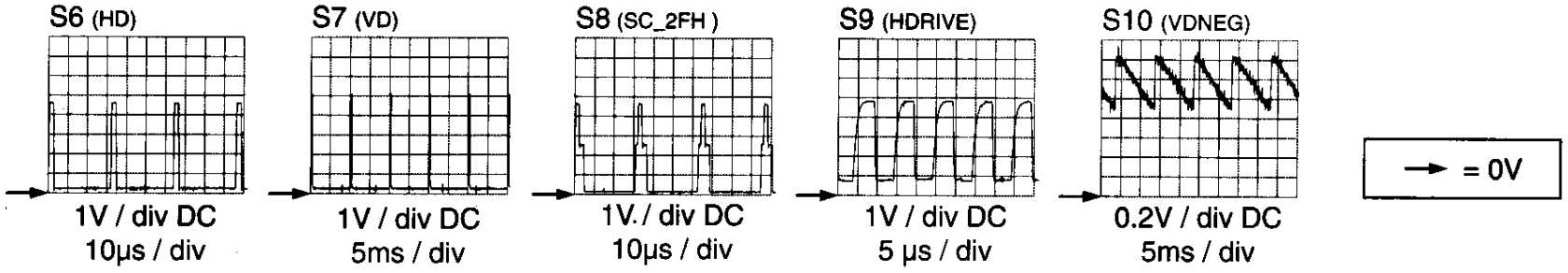

OSC_B.AI
180396

See appendix for circuit diagram LSP & SSP & DDP

Mains filter panel / Netzfilterplatine / Platine filtre d'alimentation

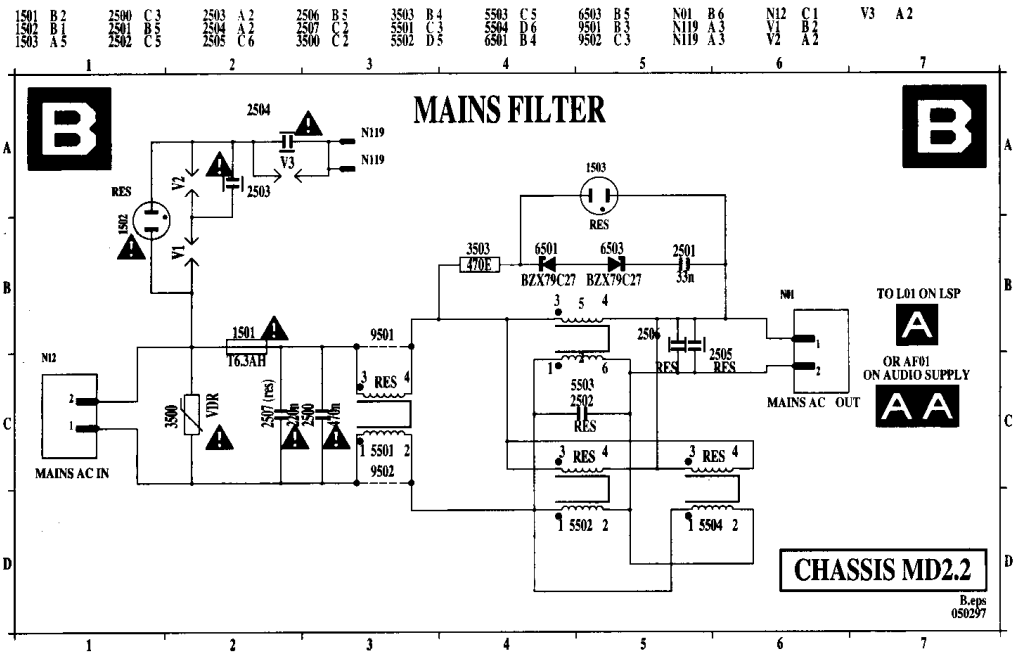

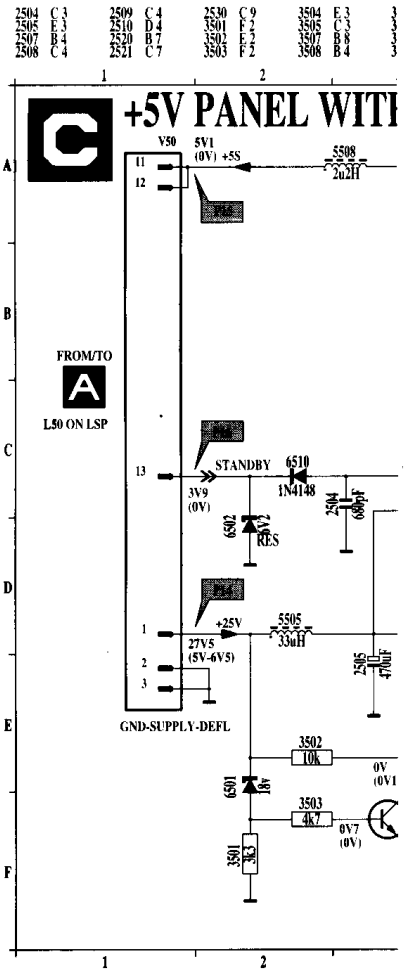

1501 A 2	2500 B 2	2503 A 1	2506 C 1	3503 D 2	5503 D 1	6503 D 2	N01 B 1	N12 C 2
1502 A 1	2501 C 2	2504 A 1	2507 B 2	5501 B 2	5504 D 1	9501 B 2	N03 C 1	N16 B 2
1503 C 2	2502 D 1	2505 C 1	3500 B 2	5502 D 1	6501 D 2	9502 B 2	N09 B 2	N119 B 1

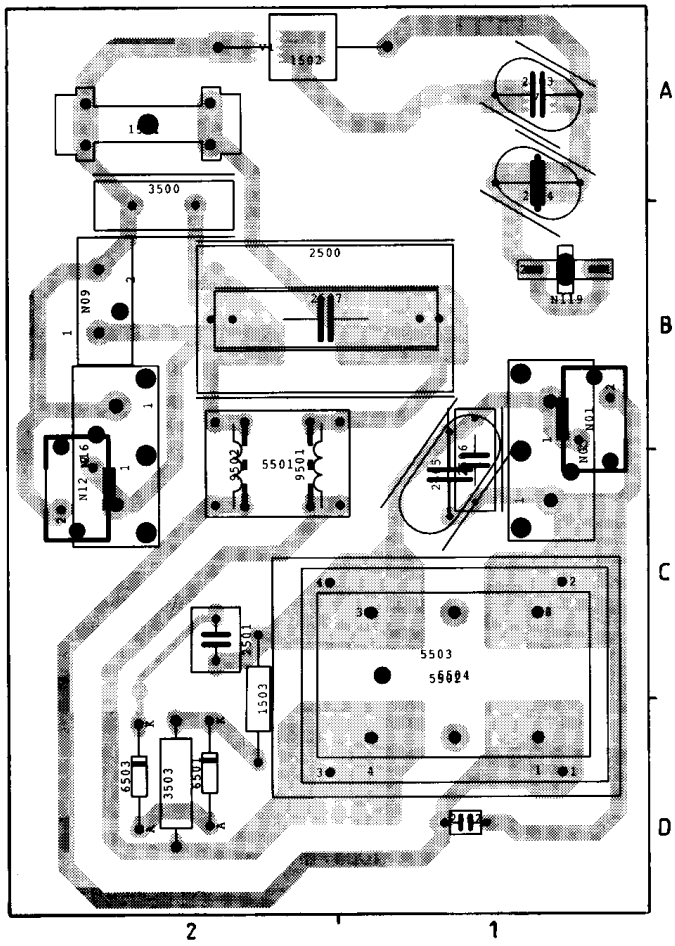

P14 ① (+25V)
27V5 DC

P14 ⏻ (+25V)

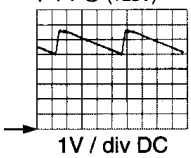

1V / div DC
0.1s / div

P15 ① (+5S)

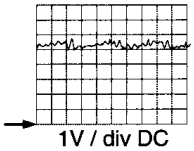

1V / div DC
10µs / div

P15 ⏻ (+5S)

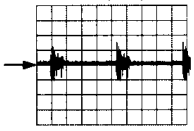

0.1V / div DC
0.1s / div

→ = 0V

OSC_C.AI
110397

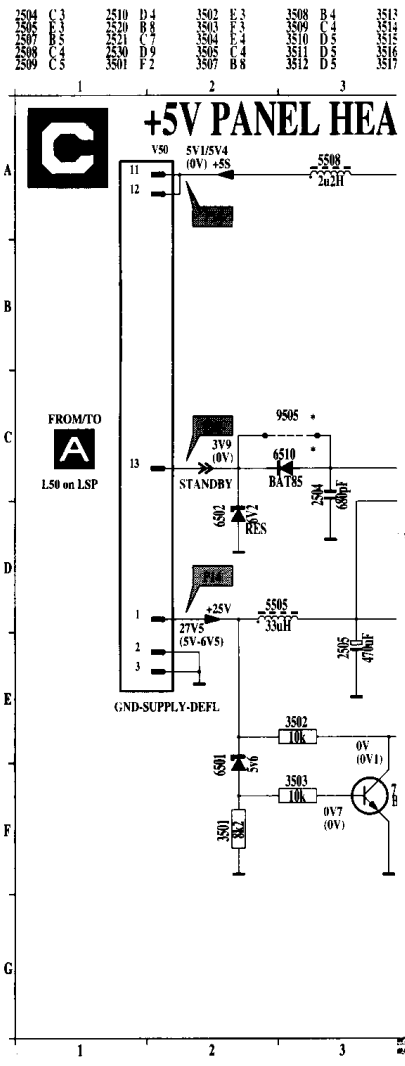

509 C 4	3513 D 5	3517 E 5	3521 C 4	3526 B 9	3530 C 9	5508 A 3	6501 E 2	6521 C 8	9501 D 8
510 D 5	3514 E 5	3518 F 5	3523 A 9	3527 B 9	3531 F 5	5520 C 8	6502 D 2	7502 F 3	V50 A 1
511 D 5	3515 E 5	3519 F 5	3524 A 9	3528 B 9	3532 F 5	5521 C 8	6510 C 2	7503 E 4	
512 D 5	3516 E 5	3520 B 7	3525 B 9	3529 C 9	5505 D 2	5522 D 7	6520 C 7	7508 B 5	

IOUT HEATSINK

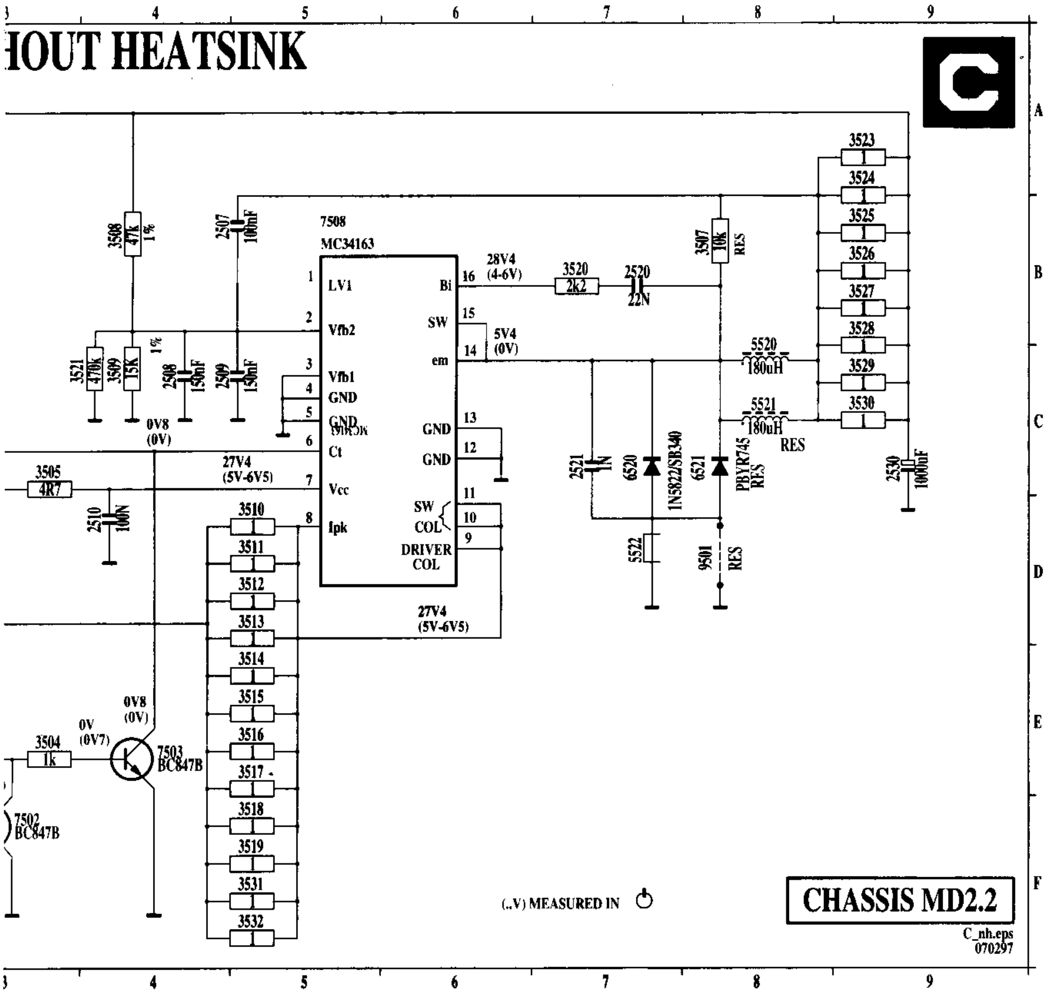

D 5	3518 F 5	3532 F 5	3537 E 6	5508 A 3	6510 C 3	7504 E 6	9504 D 8
E 5	3519 F 5	3533 G 5	3538 E 7	5520 C 8	6520 C 7	7508 B 5	9505 C 3
E 5	3520 B 7	3534 G 5	3539 E 7	5522 D 8	6521 C 8	9501 D 6	V50 A 2
E 5	3521 C 4	3535 G 5	3540 E 6	6501 E 2	7502 F 3	9502 C 7	
E 5	3531 F 5	3536 E 6	5505 D 3	6502 D 2	7503 E 4	9503 C 7	

TSINK 1 CM (2.1A) /2.5 CM (2.5A)

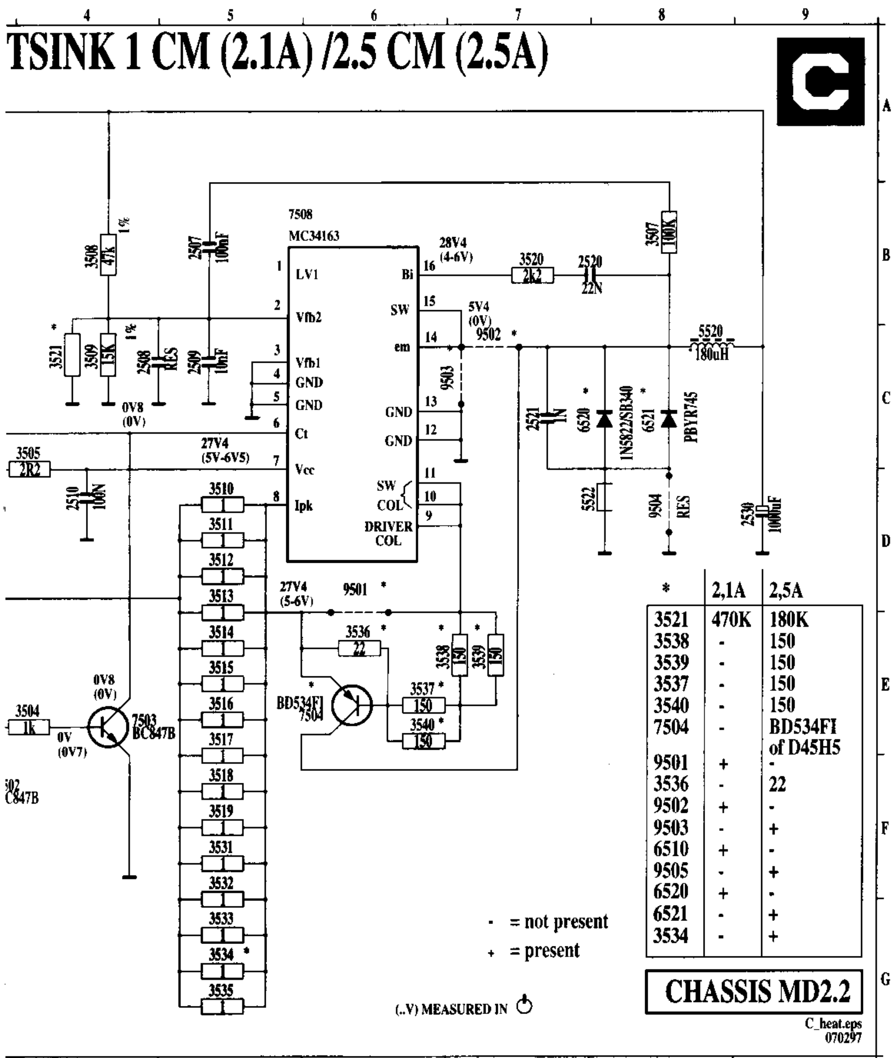

*	2,1A	2,5A
3521	470K	180K
3538	-	150
3539	-	150
3537	-	150
3540	-	150
7504	-	BD534FI of D45H5
9501	+	-
3536	-	22
9502	+	-
9503	-	+
6510	+	-
9505	-	+
6520	+	-
6521	-	+
3534	-	+

0050 A 1
2504 B 1
2505 B 2
2507 A 1
2508 A 1
2509 A 1
2510 B 1

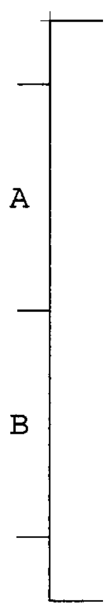

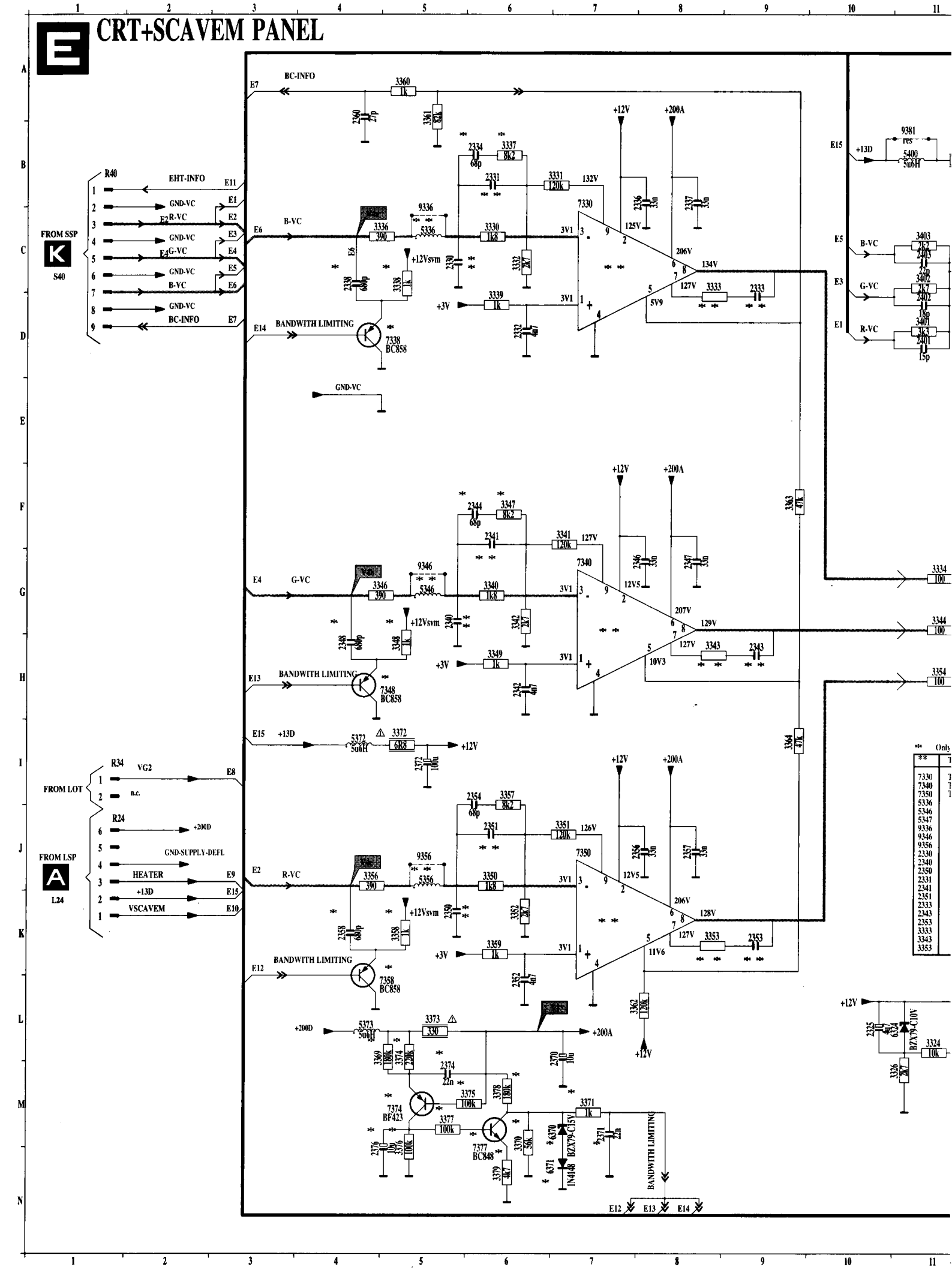
CRT+SCAVEM PANEL
FROM SSP
S40
FROM LOT
FROM LSP
L24
BC-INFO
EHT-INFO
GND-VC
R-VC
G-VC
B-VC
BANDWITH LIMITING
+12V
+200A
+12Vsvm
+3V
+13D
VG2
n.c.
+200D
GND-SUPPLY-DEFL
HEATER
VSCAVEM
7330
7340
7350
7338 BC858
7348 BC858
7358 BC858
7374 BF423
7377 BC848
BZX79-C15V
1N4148
BZX79-C10V
Only

Bildröhren & SCAVEM-Platine / Platine tube-image & SCAVEM

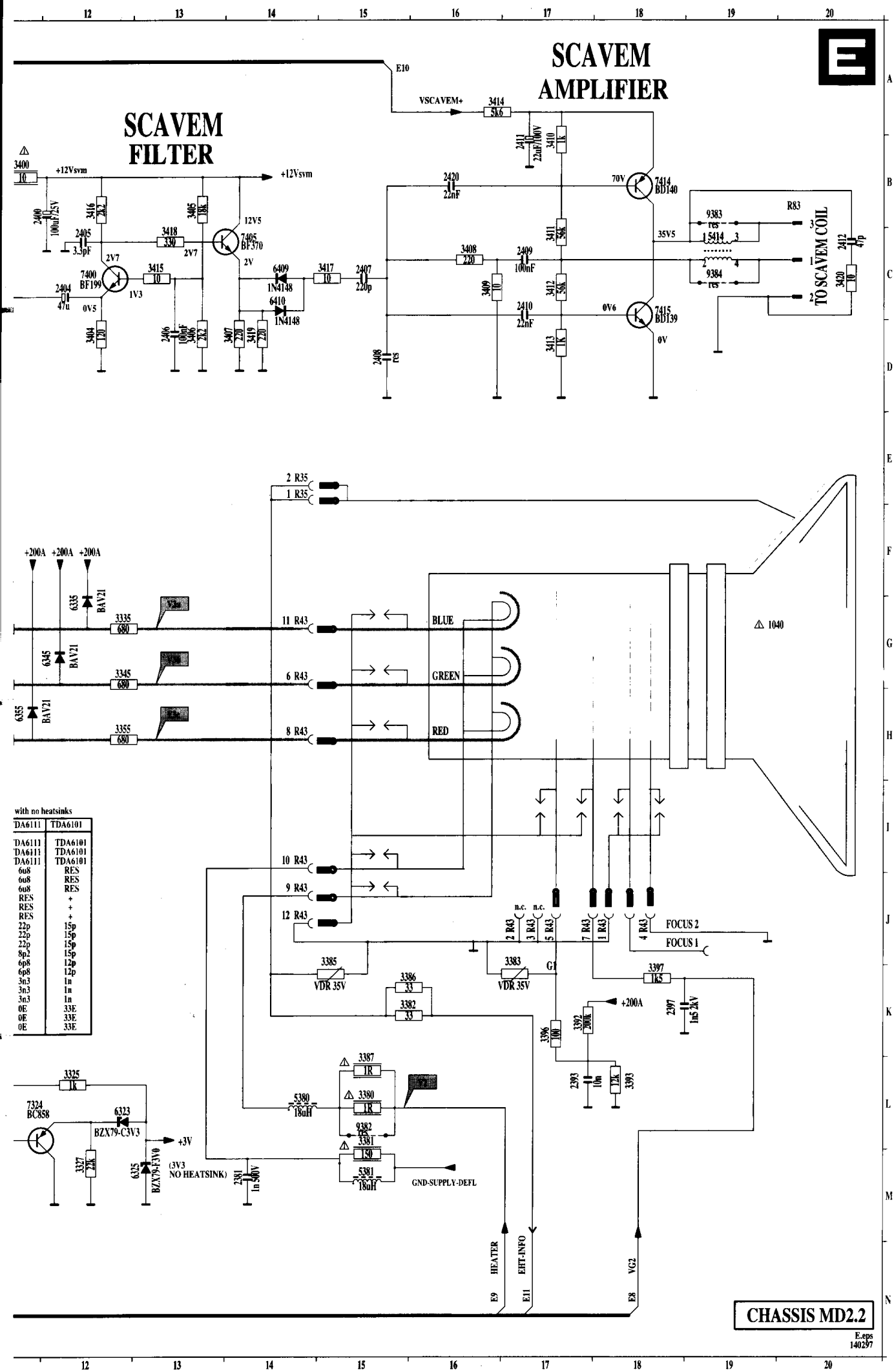

with no heatsinks	
TDA6111	TDA6101
TDA6111	TDA6101
TDA6111	TDA6101
TDA6111	TDA6101
6u8	RES
6u8	RES
6u8	RES
RES	+
RES	+
RES	+
22p	15p
22p	15p
22p	15p
8p2	15p
6p8	12p
6p8	12p
3n3	1n
3n3	1n
3n3	1n
0E	33E
0E	33E
0E	33E

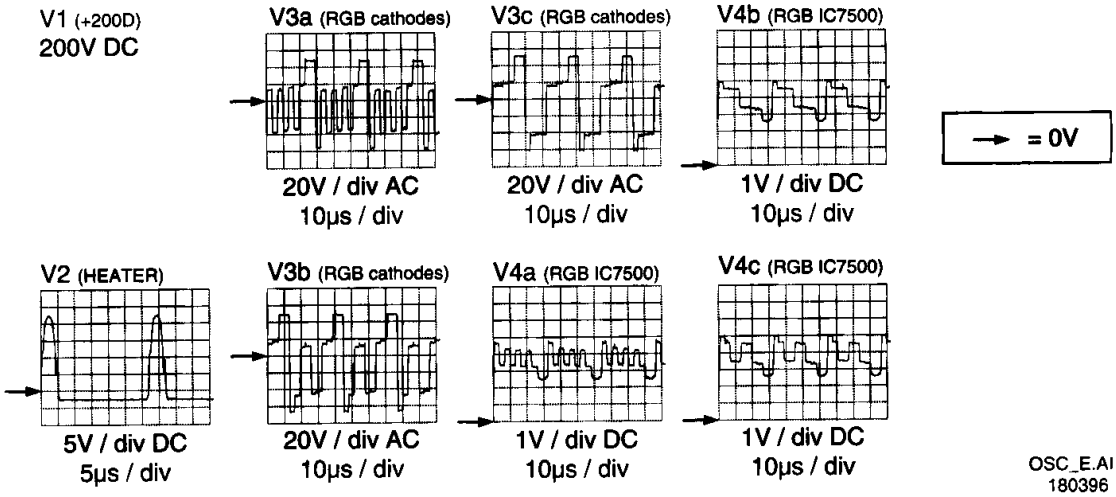
V1 (+200D)
200V DC
V3a (RGB cathodes)
20V / div AC
10µs / div
V3c (RGB cathodes)
20V / div AC
10µs / div
V4b (RGB IC7500)
1V / div DC
10µs / div
= 0V
V2 (HEATER)
5V / div DC
5µs / div
V3b (RGB cathodes)
20V / div AC
10µs / div
V4a (RGB IC7500)
1V / div DC
10µs / div
V4c (RGB IC7500)
1V / div DC
10µs / div
OSC_E.AI
180396

North/South + Frame rotation + S-correction panel / Nord/Süd + Drehrahmen + S-Korrekturplatine / Platine N/S + rotation de Trame + Correction S

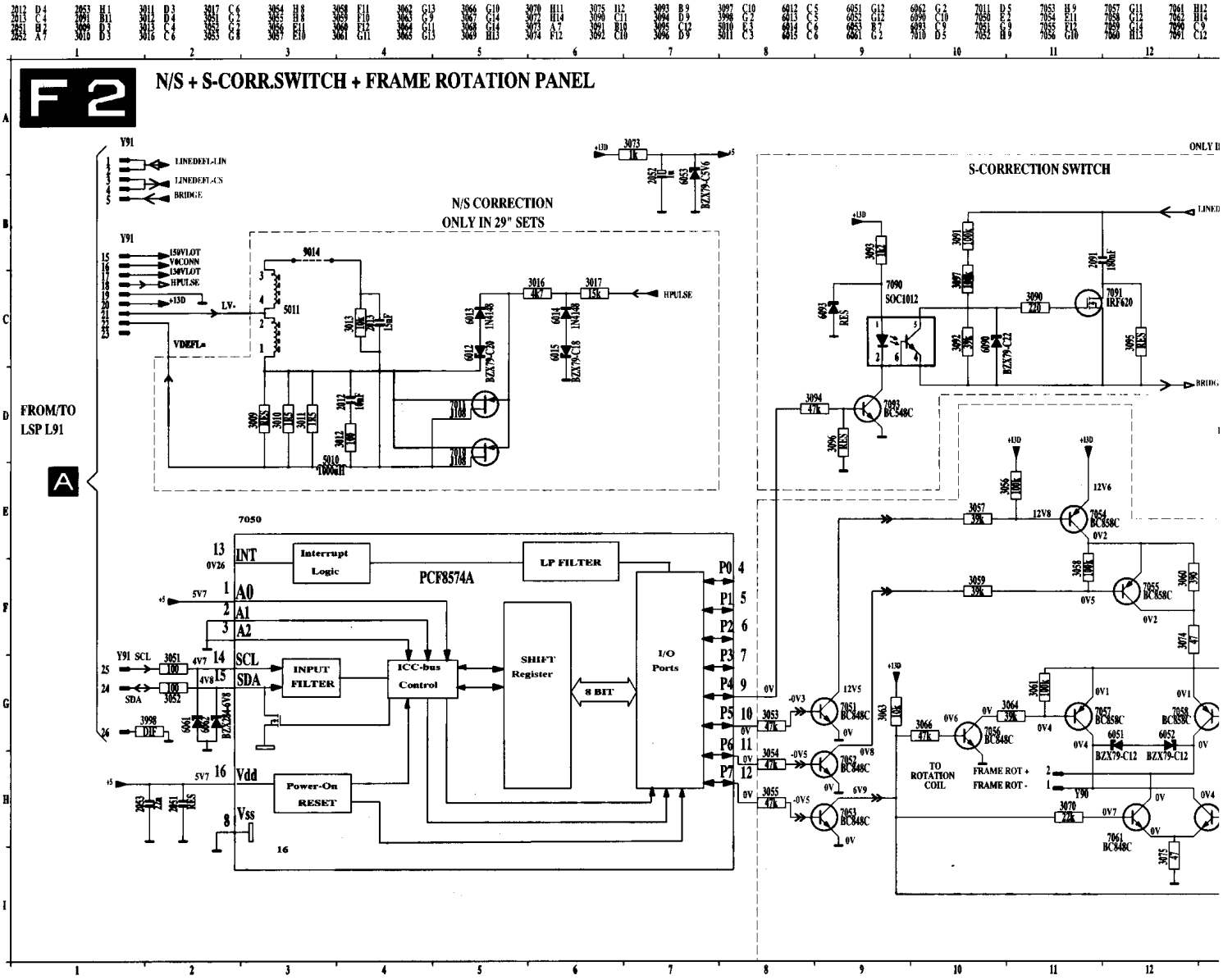

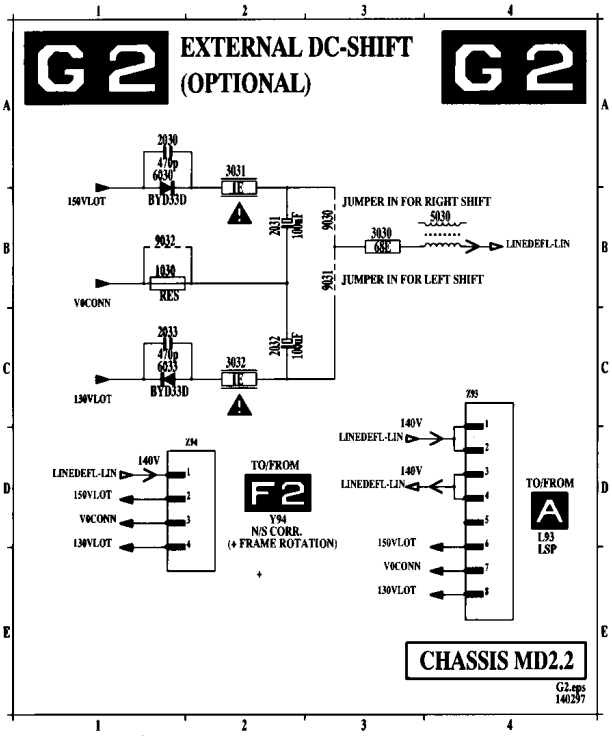

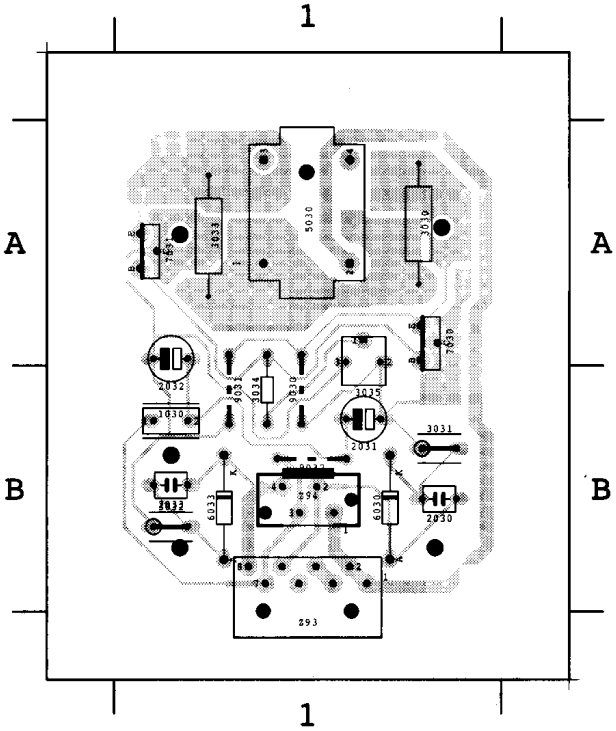

External DC shift panel / Externe-DC-verschiebungs-Platine / Platine déphasage externe CC

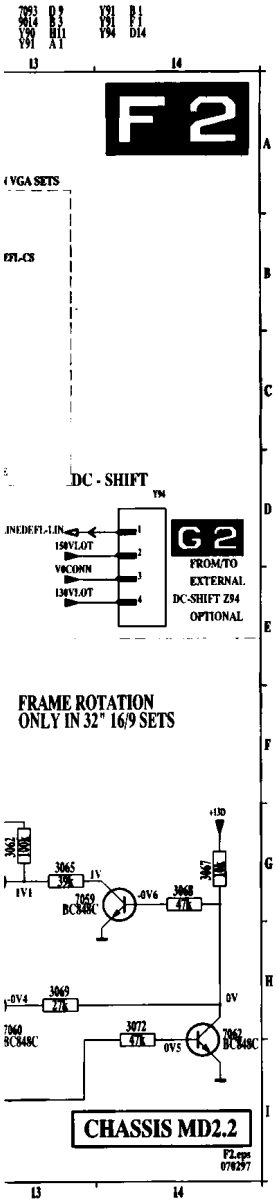

0030 A 1	3010 B 3	3053 C 2	3062 C 1	3072 C 1	3095 A 1	6010 B 3	6061 C 3	7053 C 2	7062 C 1	Y94 A 3
2012 A 2	3011 B 3	3054 C 2	3063 B 2	3073 C 2	3096 C 3	6011 B 3	6062 C 2	7054 B 2	7090 A 2	
2013 A 3	3012 A 3	3055 C 2	3064 C 1	3074 B 1	3097 A 2	6012 A 2	6090 A 1	7055 B 2	7091 A 1	
2018 A 2	3013 A 3	3056 B 2	3065 C 2	3075 C 1	3998 C 3	6013 B 2	6093 A 3	7056 C 2	7093 C 3	
2051 C 2	3016 B 2	3057 B 2	3066 C 2	3090 A 2	5010 B 3	6014 B 3	7010 B 3	7057 B 1	9012 C 3	
2052 C 1	3017 B 2	3058 B 2	3067 C 1	3091 A 1	5011 C 3	6015 B 3	7011 B 3	7058 B 1	9013 C 3	
2053 C 2	3019 B 2	3059 B 2	3068 C 1	3092 A 2	5012 A 3	6051 B 2	7050 C 2	7059 C 2	9014 B 2	
2091 A 1	3051 C 3	3060 B 2	3069 C 1	3093 A 2	5013 A 1	6052 B 2	7051 C 2	7060 B 1	Y90 B 1	
3009 B 3	3052 C 3	3061 C 1	3070 C 2	3094 C 3	5014 A 2	6053 C 2	7052 C 2	7061 B 2	Y91 C 1	

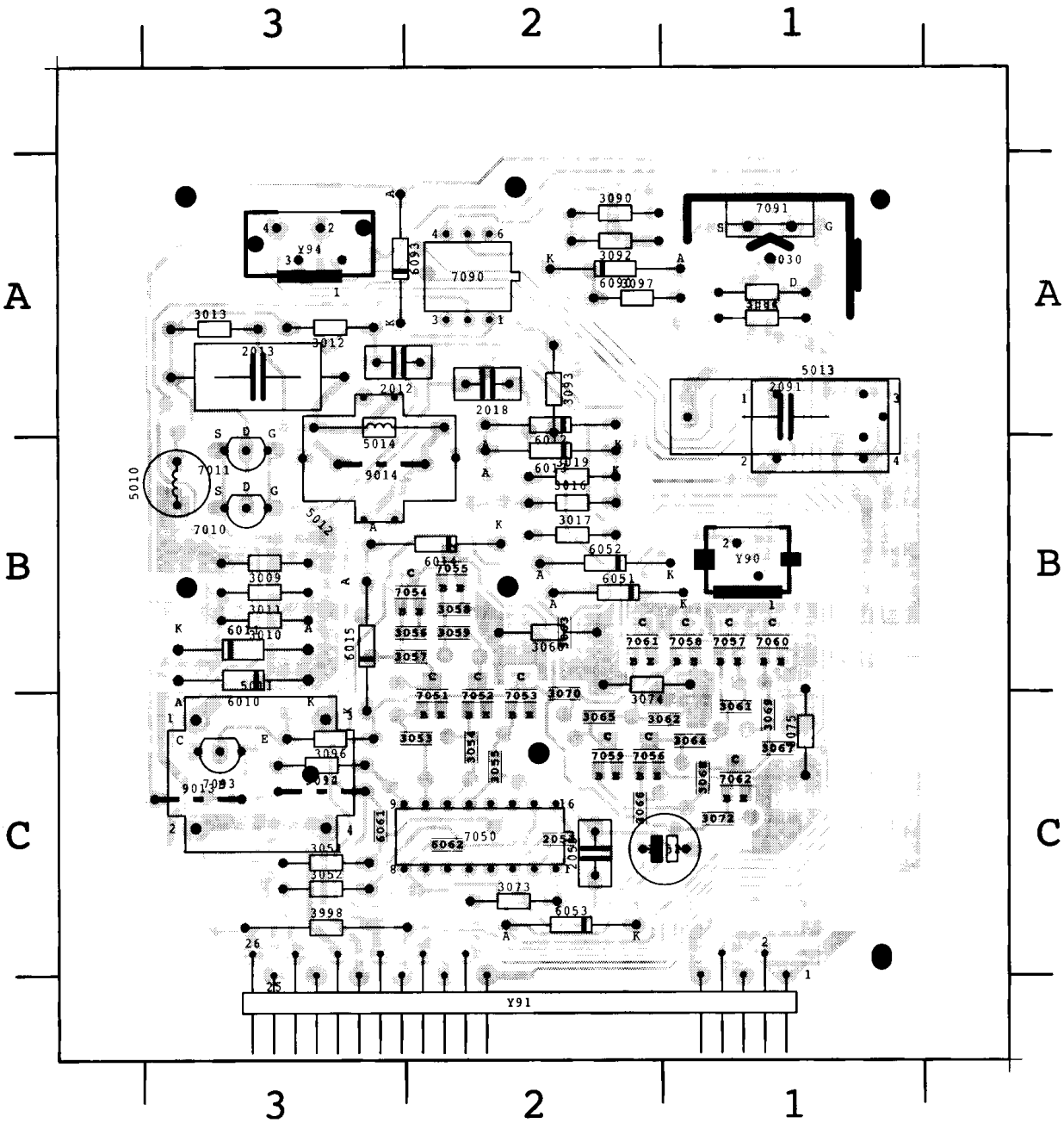

Surround sound panel / Surround Sound-Platine / Platine son Surround

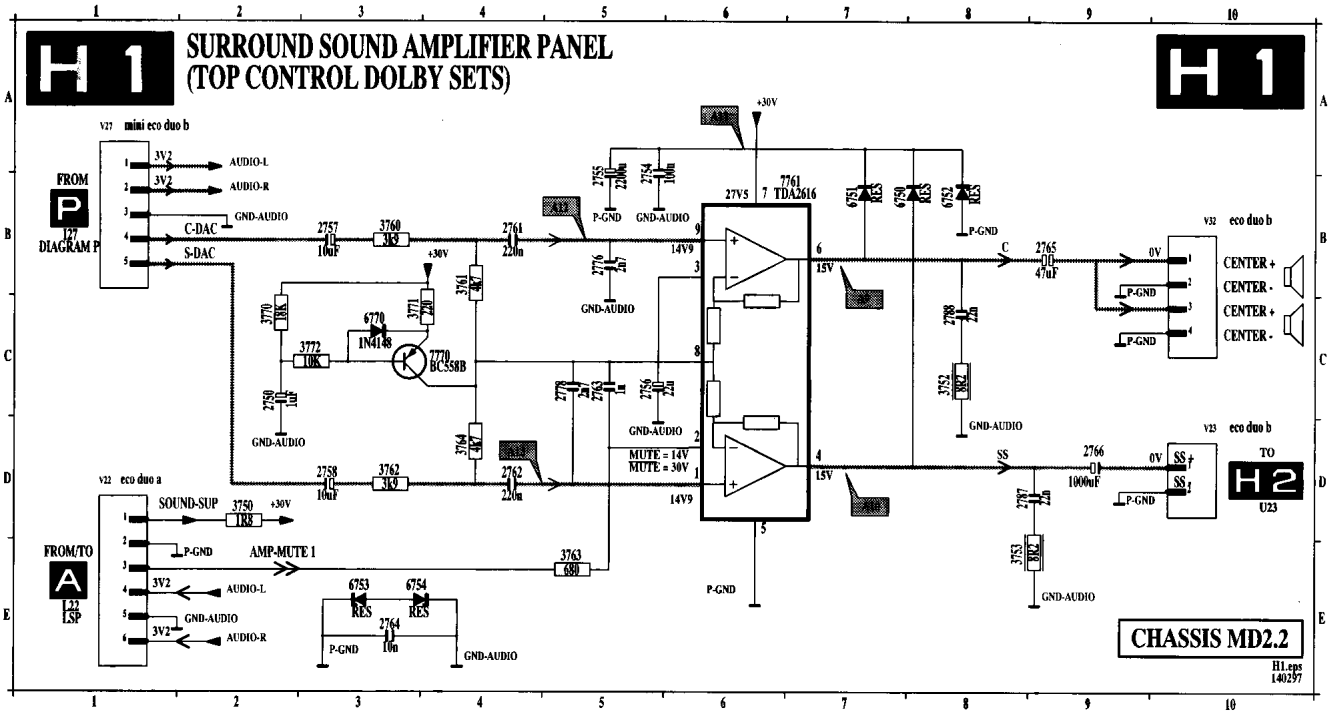

0001 A 2	2757 A 2	2764 B 2	2787 B 1	3760 A 2	3770 A 1	6751 B 2	7761 B 2	V22 C 1
2750 A 1	2758 C 2	2765 C 1	2788 C 1	3761 A 2	3771 A 1	6752 B 2	7770 A 1	V23 C 2
2754 B 1	2761 A 2	2766 B 2	3750 C 1	3762 B 2	3772 B 1	6753 B 1	9755 B 2	V27 C 2
2755 A 1	2762 C 2	2776 A 2	3752 B 1	3763 C 2	3998 A 2	6754 B 1	9756 B 1	V32 C 1
2756 B 2	2763 C 2	2778 B 2	3753 B 1	3764 B 2	6750 B 2	6770 B 1	9757 B 1	

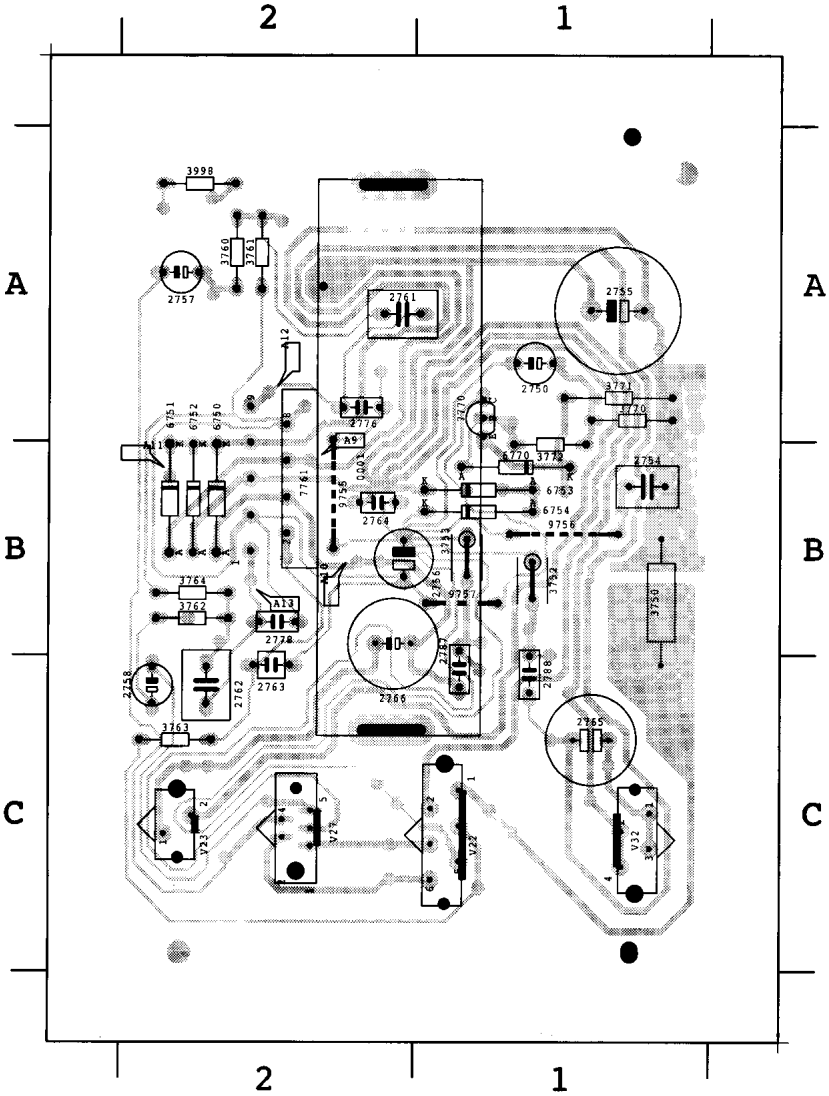

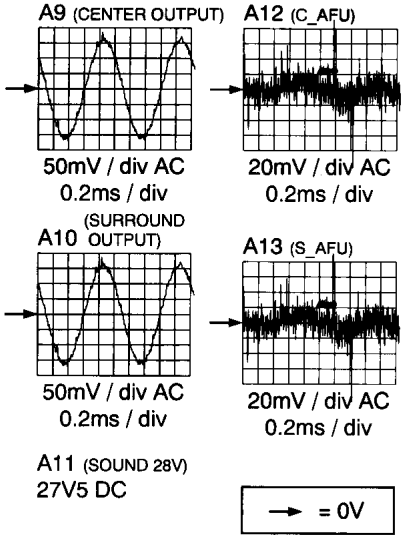

OSC_H1.AI
130396

Clickfit panel / Clickfit-Platine / Platine borne de raccordement

2702	D 7	2705	C 8	2708	H 8	3702	D 4	3998	B 5	5703	G 9	6702	E 8	9702	E 4	9705	E 6	CF2	B10	U23	H 3	U37	F 7	V2	D 9	V5	D 9
2703	E 6	2706	D 8	2709*	H 7	3703	H 4	5701	C 9	5704	H 9	6703	H 7	9703	E 5	9706	F 6	SK1	B 3	U26	A 2	U38	C 2	V3	G 9		
2704	F 6	2707	G 8	3701	C 5	3704*	H 5	5702	D 9	6701	C 8	9701	E 4	9704	E 5	9712	H 8	U138	G 3	U36	E 7	V1	C 9	V4	H 9		

1 2 3 4 5 6 7 8 9

H2 CLICKFIT - PANEL (DOLBY SETS ONLY) H1

DBE (Dynamic Bass Enhancement) panel / DBE Dynamic Bass Enhancement)-Platine

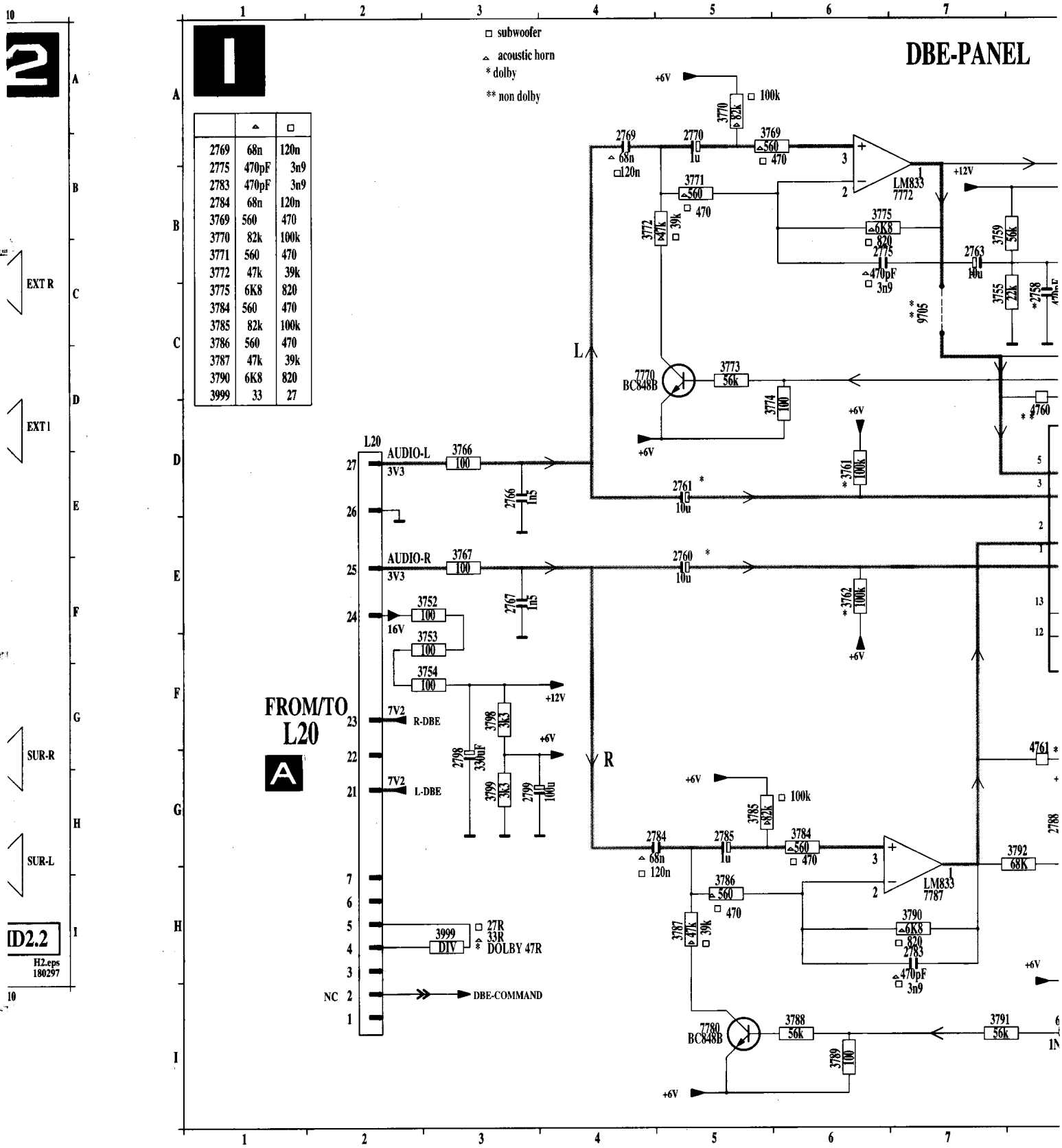

	△	□
2769	68n	120n
2775	470pF	3n9
2783	470pF	3n9
2784	68n	120n
3769	560	470
3770	82k	100k
3771	560	470
3772	47k	39k
3775	6K8	820
3784	560	470
3785	82k	100k
3786	560	470
3787	47k	39k
3790	6K8	820
3999	33	27

Platine DBE (Amélioration Dynamique des Basses

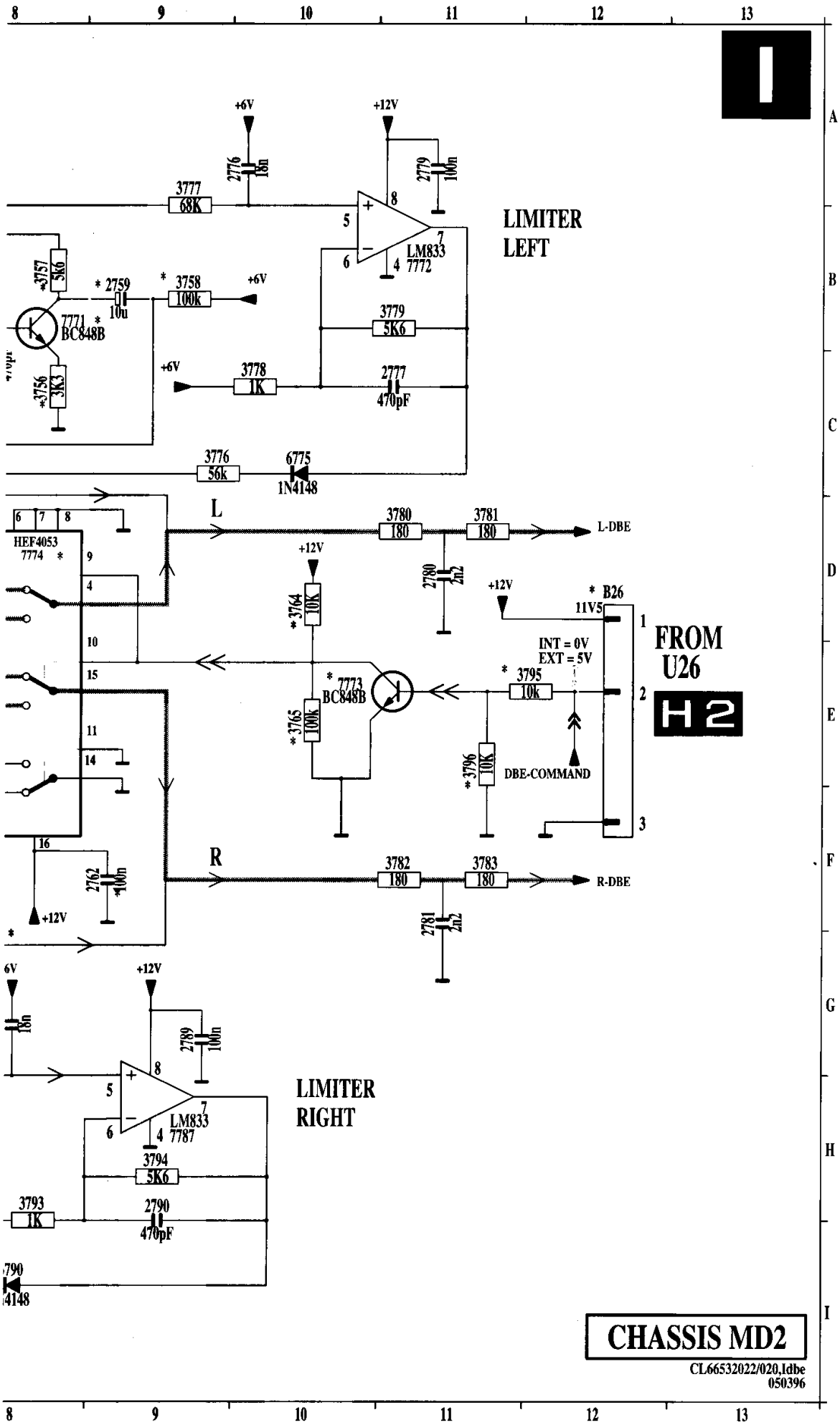

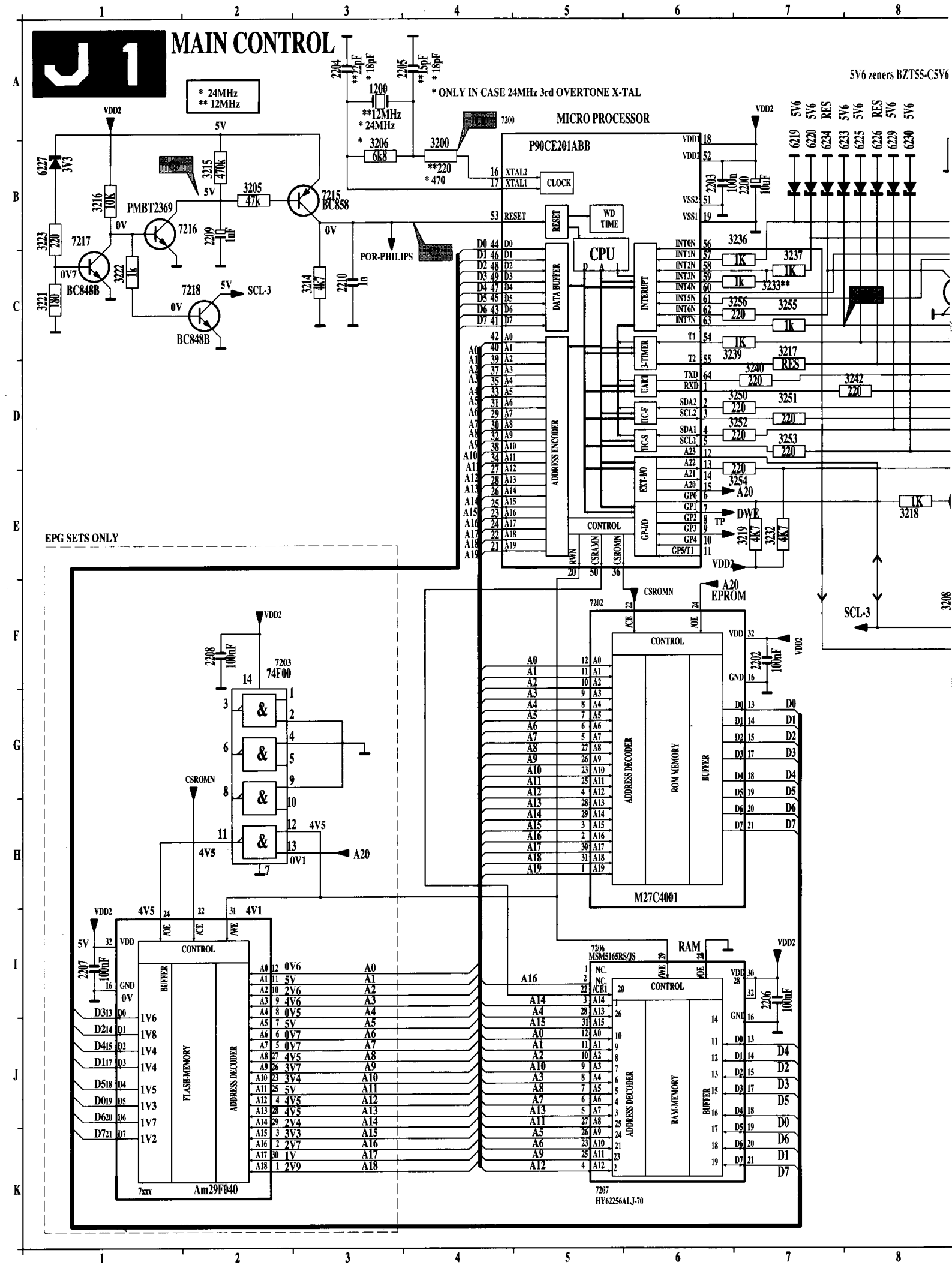
J 1
MAIN CONTROL
* 24MHz
** 12MHz
* ONLY IN CASE 24MHz 3rd OVERTONE X-TAL
5V6 zeners BZT55-C5V6
MICRO PROCESSOR
P90CE201ABB
CLOCK
RESET
WD TIME
CPU
DATA BUFFER
ADDRESS ENCODER
CONTROL
INTERUPT
3-TIMER
UART
IIC-F
IICS
EXT-I/O
GP-I/O
POR-PHILIPS
PMBT2369
BC858
BC848B
SCL-3
EPG SETS ONLY
74F00
EPROM
M27C4001
ADDRESS DECODER
ROM MEMORY
BUFFER
RAM
MSM5165RS/JS
RAM-MEMORY
FLASH-MEMORY
Am29F040
HY62256ALJ-70

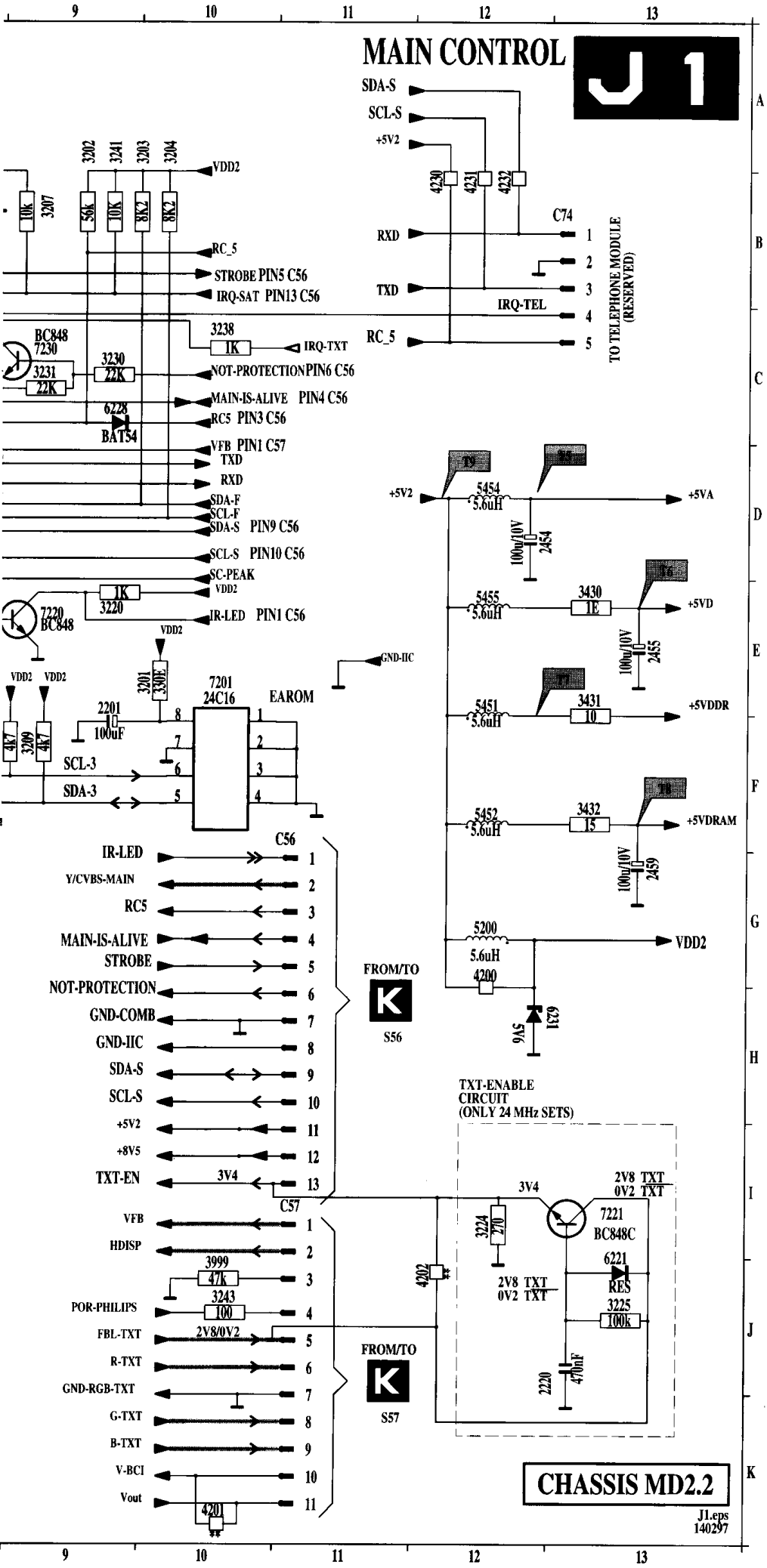

1200	A 3
2200	B 7
2201	E 9
2202	F 7
2203	B 6
2204	A 3
2205	A 4
2206	I 7
2207	I 1
2208	F 2
2209	B 2
2210	C 3
2220	J13
2454	D12
2455	E13
2459	G13
3200	B 4
3201	E10
3202	A 9
3203	A10
3204	A10
3205	B 2
3206	B 3
3207	B 9
3208	F 8
3209	F 9
3214	C 3
3215	B 2
3216	B 1
3217	C 7
3218	E 8
3219	E 7
3220	E 9
3221	C 1
3222	C 1
3223	B 1
3224	I12
3225	J13
3230	C 9
3231	C 9
3232	E 7
3233	C 7
3236	B 7
3237	C 7
3238	C10
3239	C 7
3240	D 7
3241	A 9
3242	D 8
3243	J10
3250	D 7
3251	D 7
3252	D 7
3253	D 7
3254	E 7
3255	C 7
3256	C 7
3430	E13
3431	E13
3432	F13
3999	J10
4200	G12
4201	K10
4202	J12
4230	B12
4231	B12
4232	B12
5200	G12
5451	E12
5452	F12
5454	D12
5455	E12
6219	A 7
6220	A 7
6221	J13
6225	A 8
6226	A 8
6227	B 1
6228	C 9
6229	A 8
6230	A 8
6231	H12
6233	A 8
6234	A 7
7200	A 4
7201	E10
7202	F 5
7203	F 3
7204	K 1
7206	I 5
7207	K 5
7215	B 3
7216	B 1
7217	B 1
7218	C 1
7220	E 9
7221	I13
7230	C 9
C56	F10
C57	I11
C74	B12

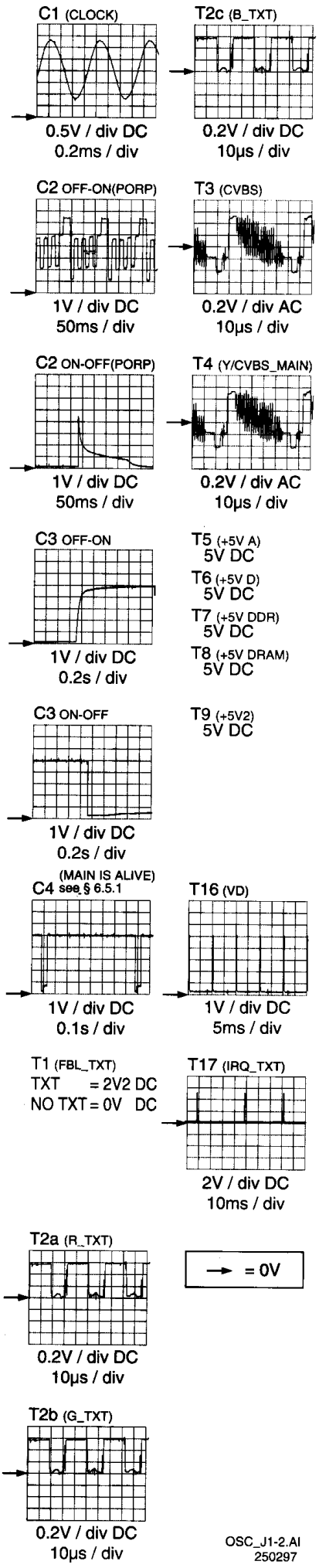

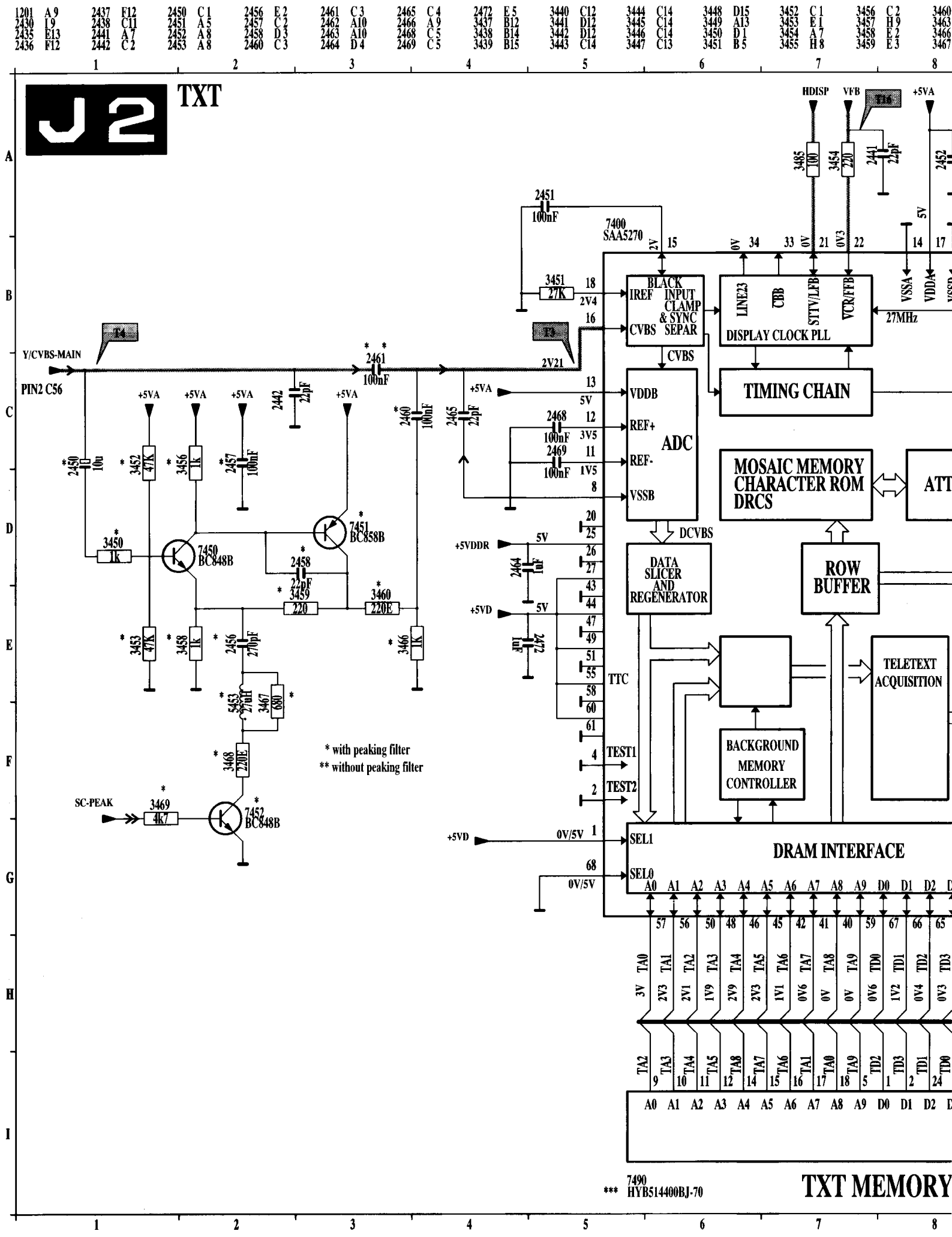
J2
TXT
Y/CVBS-MAIN
PIN2 C56
7400
SAA5270
BLACK
INPUT
CLAMP
& SYNC
SEPAR
IREF
CVBS
LINE23
CBB
STTV/LFB
VCR/FFB
DISPLAY CLOCK PLL
27MHz
TIMING CHAIN
VDDB
REF+
REF-
VSSB
ADC
MOSAIC MEMORY
CHARACTER ROM
DRCS
DCVBS
DATA
SLICER
AND
REGENERATOR
ROW
BUFFER
TELETEXT
ACQUISITION
BACKGROUND
MEMORY
CONTROLLER
TTC
TEST1
TEST2
SEL1
SEL0
DRAM INTERFACE
7450
BC848B
7451
BC858B
7452
BC848B
SC-PEAK
* with peaking filter
** without peaking filter
*** 7490
HYB514400BJ-70
TXT MEMORY

TXT & Control-Platine / Platine TXT & Commande

E 3	3468	F 2	3483	G12	3489	F11	3495*	F12	7400	A 5	7452	F 2	7456	C14	7490	I 5
A10	3469	F 1	3484	G12	3490	F11	3497	B11	7449	D13	7453	D12	7457	B12		
E 3	3481	H10	3485	A 7	3491*	E12	5453	E 2	7450	D 2	7454	D14	7458	B14		
E 2	3482	H10	3488	F11	3493*	E12	5460	A10	7451	D 3	7455	C13	7459	A15		

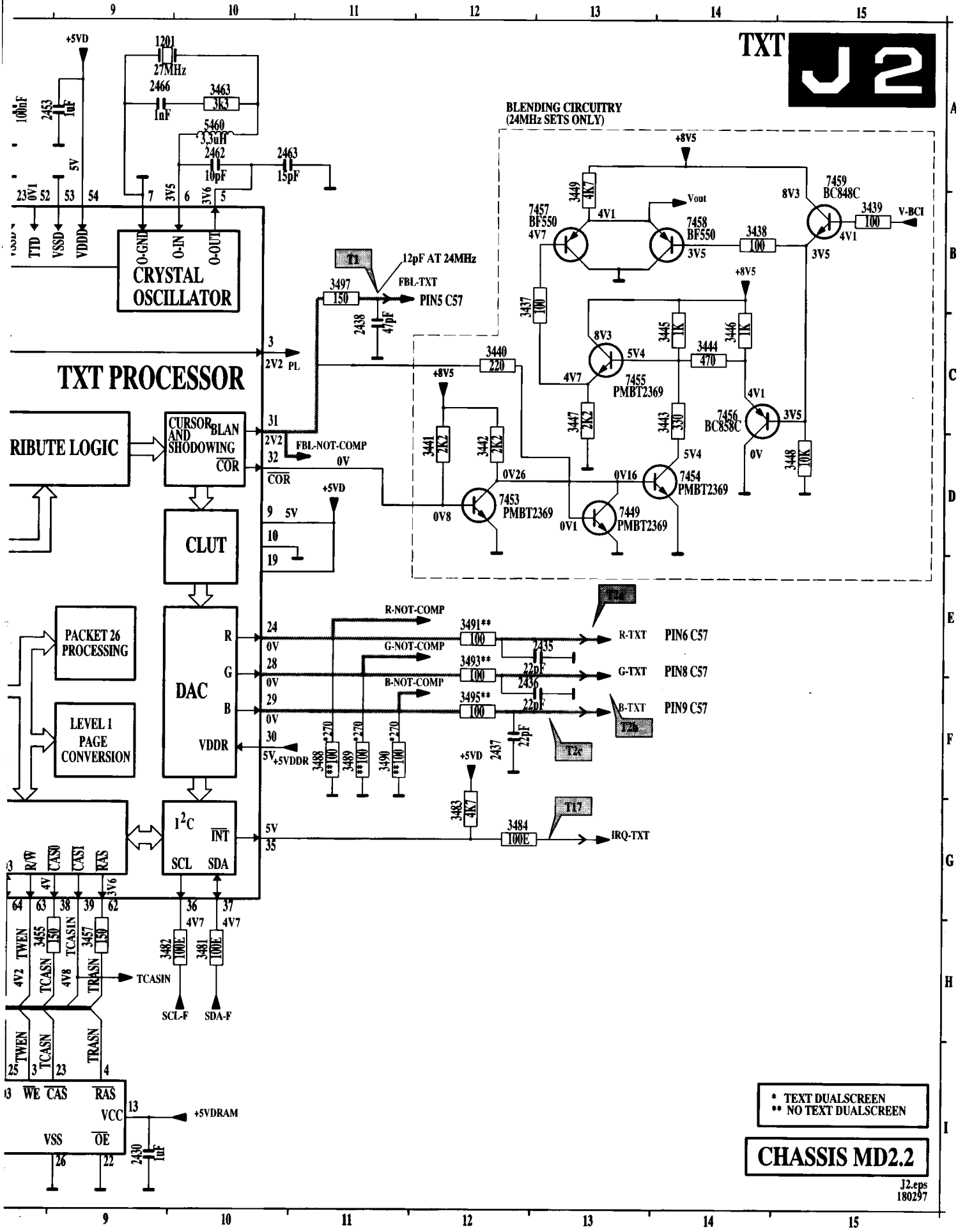

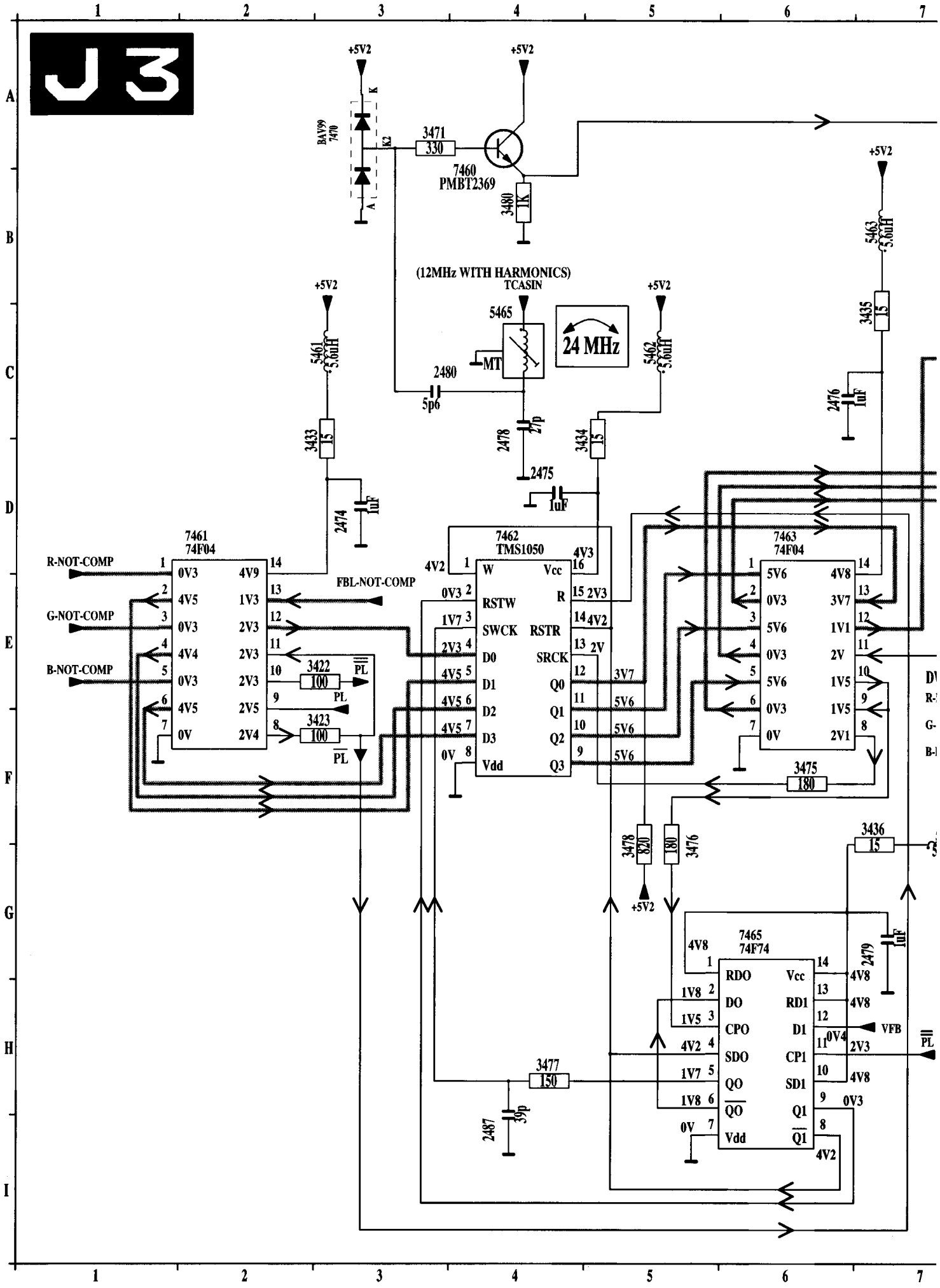
J3
+5V2
BAV99
7470
K
K2
A
3471
330
7460
PMBT2369
3480
1K
5463
5.6uH
3435
15
(12MHz WITH HARMONICS)
TCASIN
5465
MT
24 MHz
5461
5.6uH
5462
5.6uH
2480
5p6
2478
27p
2475
1uF
2476
1uF
3433
15
3434
15
2474
1uF
7461
74F04
R-NOT-COMP
G-NOT-COMP
B-NOT-COMP
FBL-NOT-COMP
0V3
4V9
4V5
1V3
0V3
2V3
4V4
2V3
0V3
2V3
4V5
2V5
0V
2V4
3422
100
3423
100
PL
7462
TMS1050
W
Vcc
RSTW
R
SWCK
RSTR
D0
SRCK
D1
Q0
D2
Q1
D3
Q2
Vdd
Q3
4V2
4V3
2V3
2V
3V7
5V6
7463
74F04
5V6
4V8
0V3
3V7
5V6
1V1
0V3
2V
5V6
1V5
0V3
1V5
0V
2V1
3475
180
3478
820
180
3476
3436
15
7465
74F74
RDO
Vcc
DO
RD1
CPO
D1
SDO
CP1
QO
SD1
QO
Q1
Vdd
Q1
4V8
1V8
1V5
4V2
1V7
1V8
0V
0V4
2V3
VFB
0V3
2479
1uF
3477
150
2487
39p

TXT & Control-Platine / Platine TXT & Commande

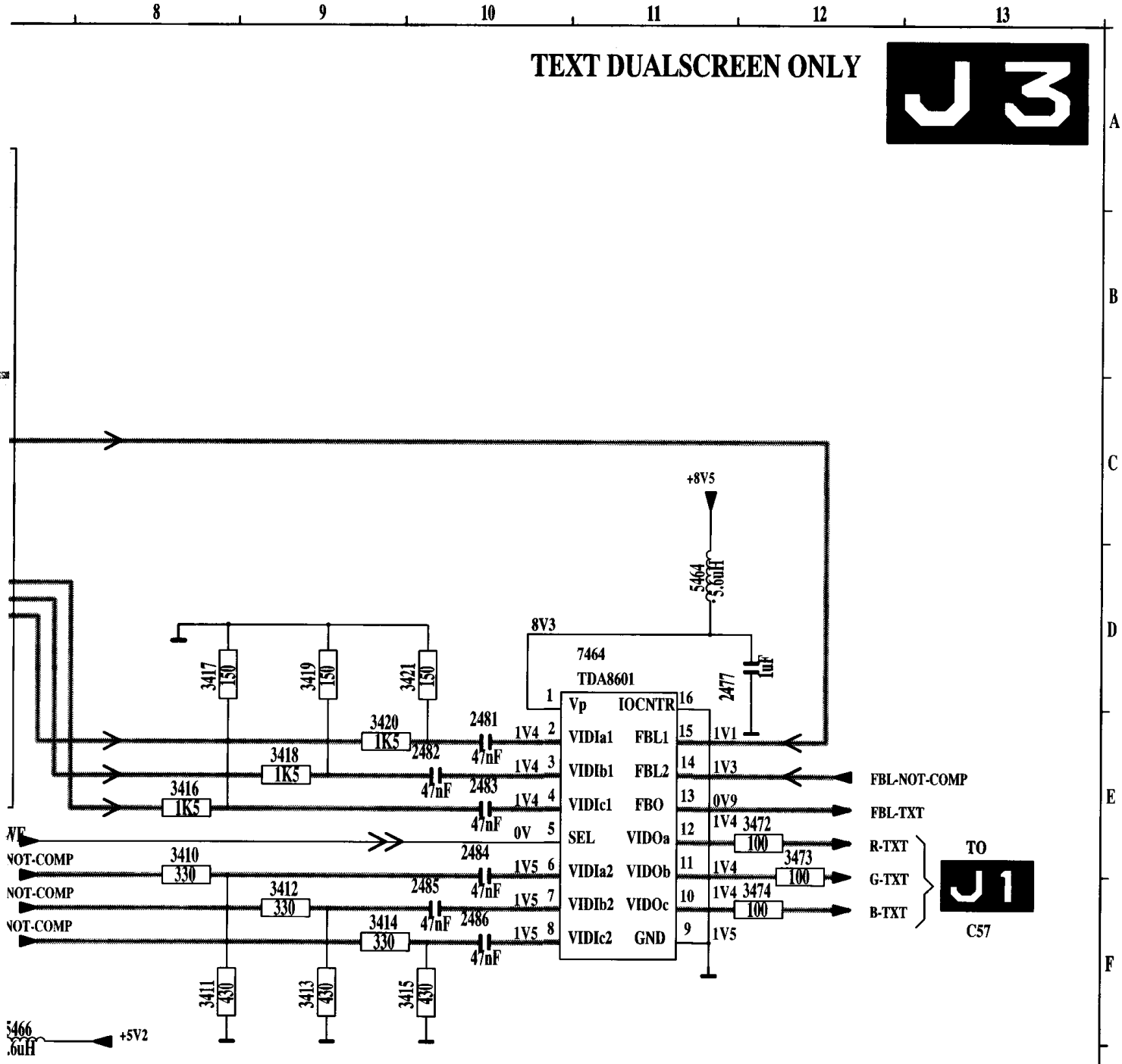

MEASURED IN TEXT DUALSCREEN MODE

2474	D3
2475	D4
2476	C6
2477	D11
2478	C4
2479	G7
2480	C3
2481	E10
2482	E10
2483	E10
2484	E10
2485	F10
2486	F10
2487	I4
3410	E8
3411	F8
3412	F9
3413	F9
3414	F9
3415	F10
3416	E8
3417	D8
3418	E9
3419	D9
3420	E9
3421	D10
3422	E3
3423	F3
3433	C3
3434	C5
3435	C7
3436	F7
3471	A3
3472	E12
3473	E12
3474	F12
3475	F6
3476	F5
3477	H4
3478	F5
3480	B4
5461	C3
5462	C5
5463	B7
5464	D11
5465	C4
5466	F7
7460	B4
7461	D2
7462	D4
7463	D6
7464	D11
7465	G6
7470	A3

CHASSIS MD2.2

J3.eps
180297

IF module / Zwischenfrequenz-Modul / Module FI

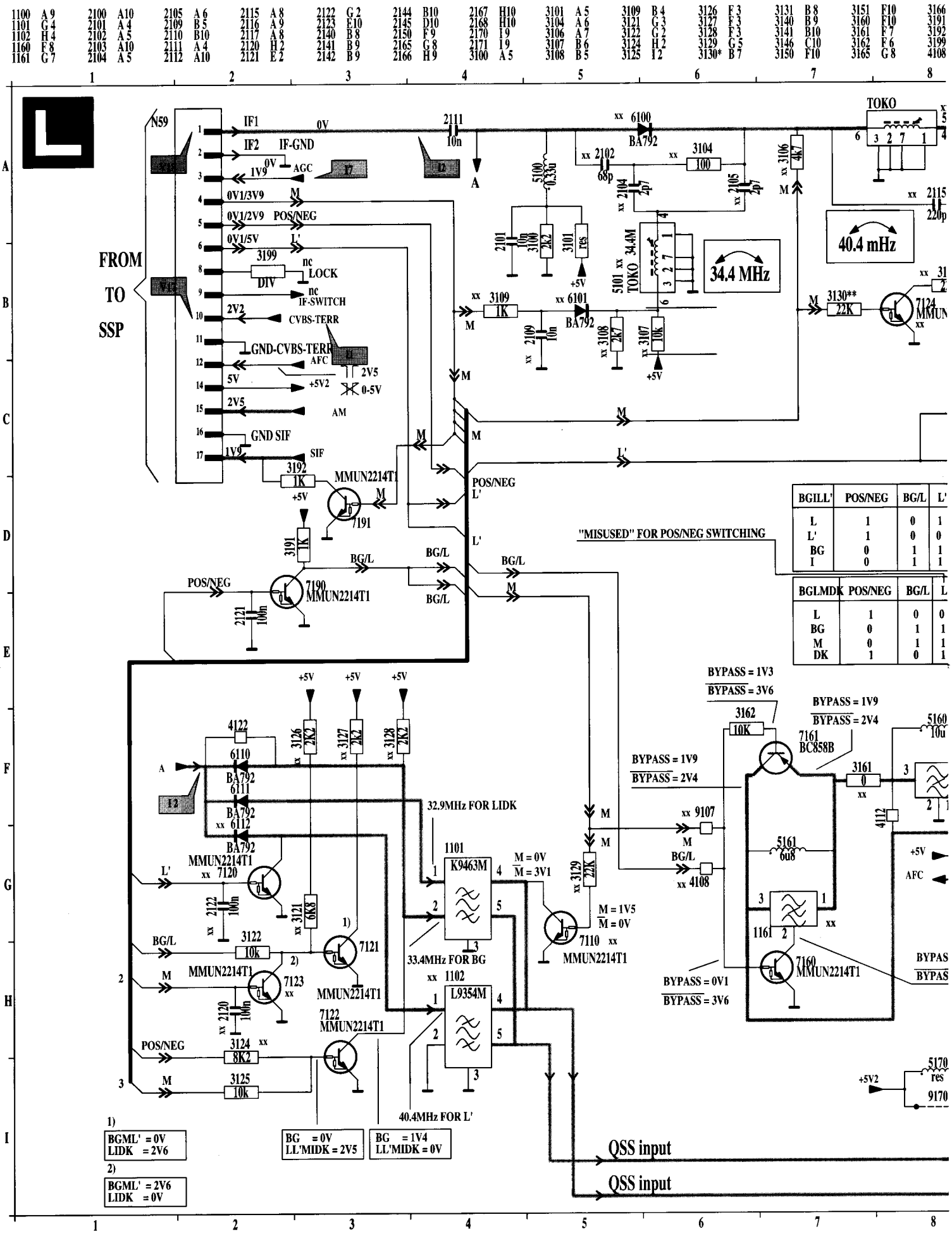

G 9	4112	F 8	5102	A 8	5161	G 7	6110	F 2	7120	G 2	7160	H 7	9111	C10
D 3	4122	F 2	5104	C10	5165	H 9	6111	F 2	7121	H 3	7161	F 7	9142	C10
C 3	4142*	C10	5140	F 9	5170	I 8	6112	G 2	7122	H 3	7190	D 3	9170	I 8
B 2	5100	A 5	5141	D10	6100	A 6	7100	A11	7123	H 2	7191	D 3	N59	A 1
G 6	5101	B 5	5160	F 8	6101	B 5	7110	H 5	7124	B 8	9107	F 6		

IF PANEL

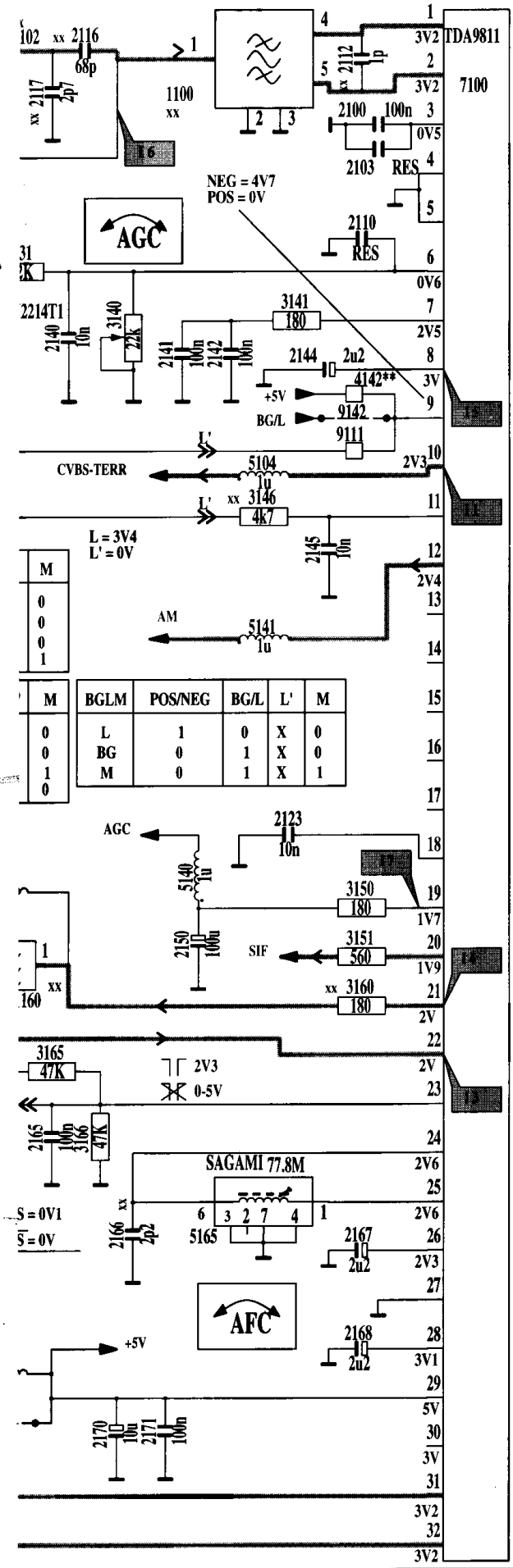

M	BGLM	POS/NEG	BG/L	L'	M
0	L	1	0	X	0
0	BG	0	1	X	0
1	M	0	1	X	1

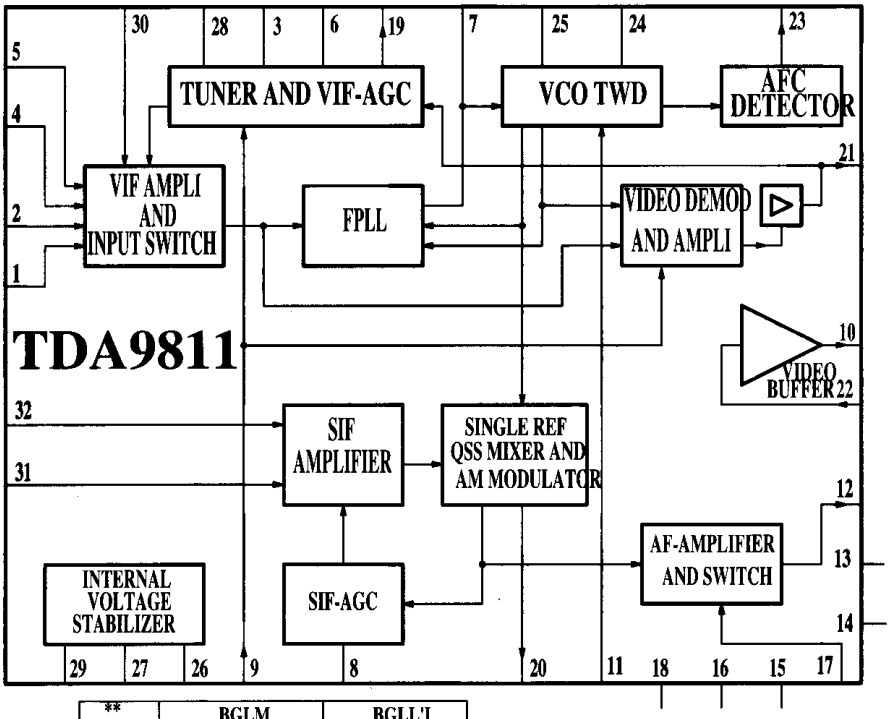

**	BGLM	BGLL'I
1100	OFWG3956M	OFWG3953M
1102	-	OFWG9354M
1160	TPS5,5MW	TPS6,0MB
1161	TPS4,5MB	TPS5,5MW
2102	68pF	JUMPER
2104	2p7	-
2105	2p7	-
2109	10n	-
2112	-	
2115	JUMPER	330p
2116	-	56p
2117	-	2p2
2120	-	100n
2122	-	100n
3104	150	47
3106	4k7	-
3107	10K	-
3108	2k7	-
3109	1k	-
3121	-	6k8
3124	8k2	6k8
3126	-	2k2
3127	2k2	4k7
3128	2k2	4k7
3129	22k	-
3130	22k	-
3131	22k	-
3146	-	4k7
3160	180	220
4107	JUMPER	-
4108	-	4142
4142	-	-
5101	34,4MC	-
5102	-	40.4MC
6100	BA582	-
6101	BA582	-
6112	-	BA582
7110	MMUN2214T1	-
7120	-	MMUN2214T1
7123	-	MMUN2214T1
7124	MMUN2214T1	-

BGLMDK ; LIKE BGLM EXCEPT:	
1100	OFWG3953M
9111	IN
9142	NOT IN

CHASSIS MD2.2

L.eps
140297

module / Zwi

I1 (CVBS_TERR)

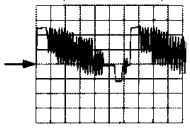

0.5V / div DC
10µs / div

I2 (IF1)

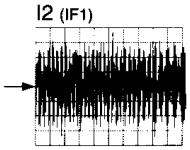

50mV / div DC
50µs / div

I3

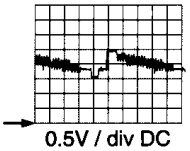

0.5V / div DC
10µs / div

I4

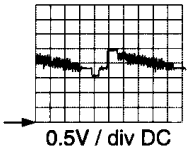

0.5V / div DC
10µs / div

I5
3V DC

I6

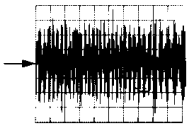

50mV / div DC
50µs / div

I7 (AGC)
1V9 DC

V17 (CVBS_TERR)

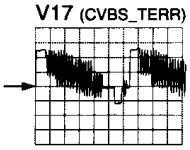

0.5V / div DC
10µs / div

V18 (IF1)

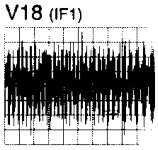

50mV / div DC
50µs / div

→ = 0V

OSC_L.AI
260297

Feature Box (Digital Scan) panel /

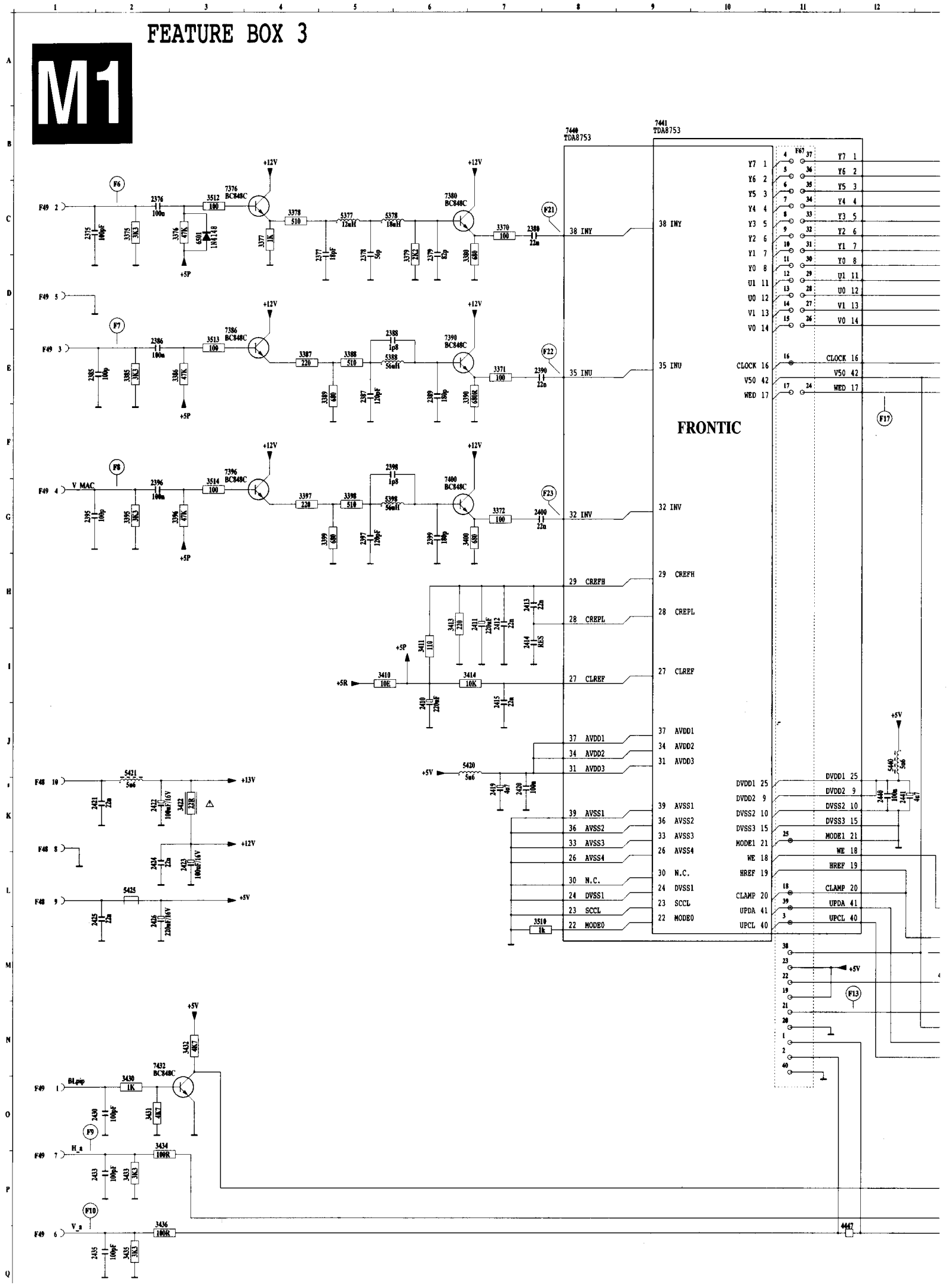

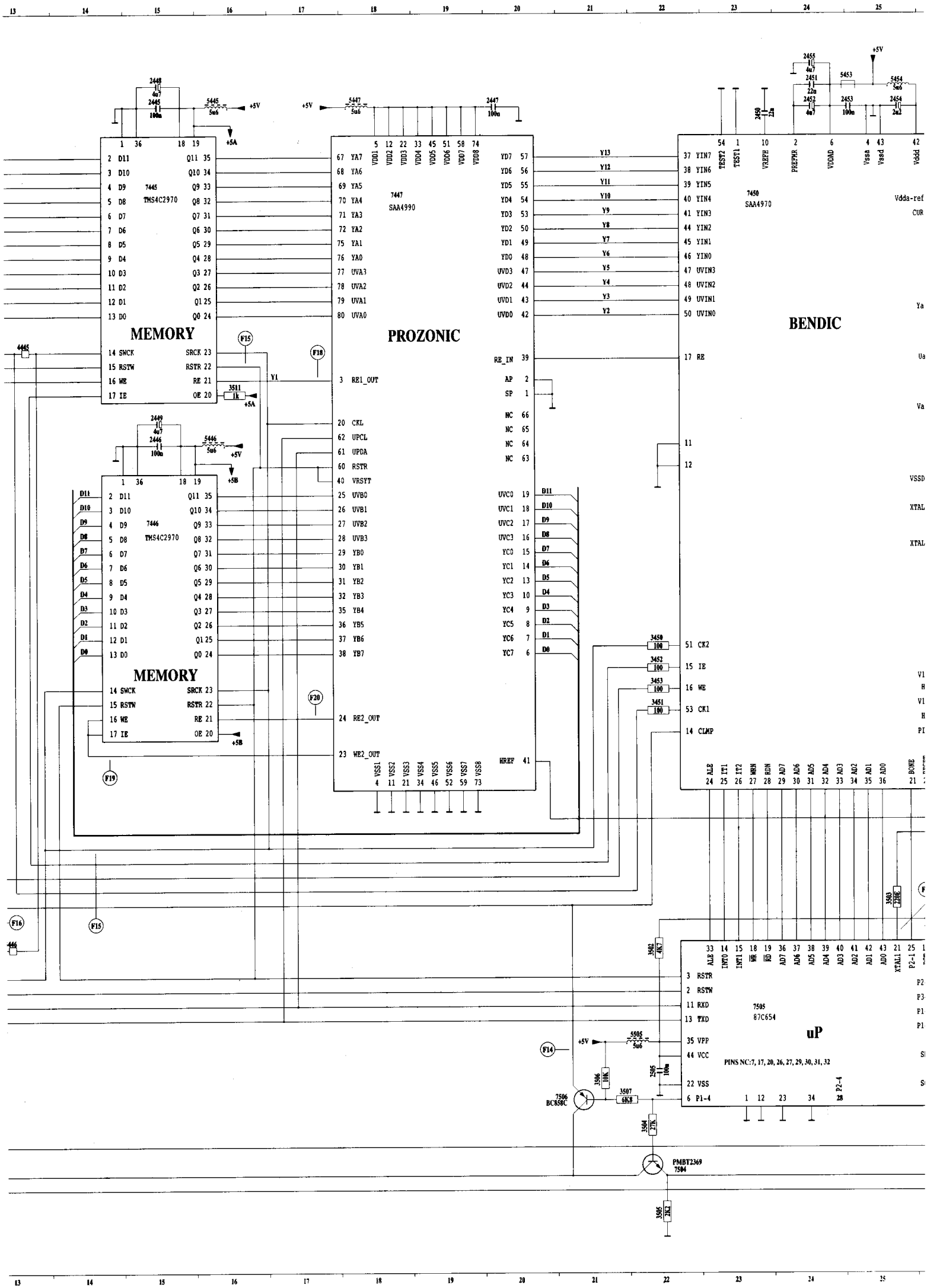
MEMORY
7445
TMS4C2970
MEMORY
7446
TMS4C2970
PROZONIC
7447
SAA4990
BENDIC
7450
SAA4970
uP
7505
87C654
PINS NC:7, 17, 20, 26, 27, 29, 30, 31, 32
7506
BC858C
PMBT2369
7504

Platine Boîtier Numérique (balayage numérique)

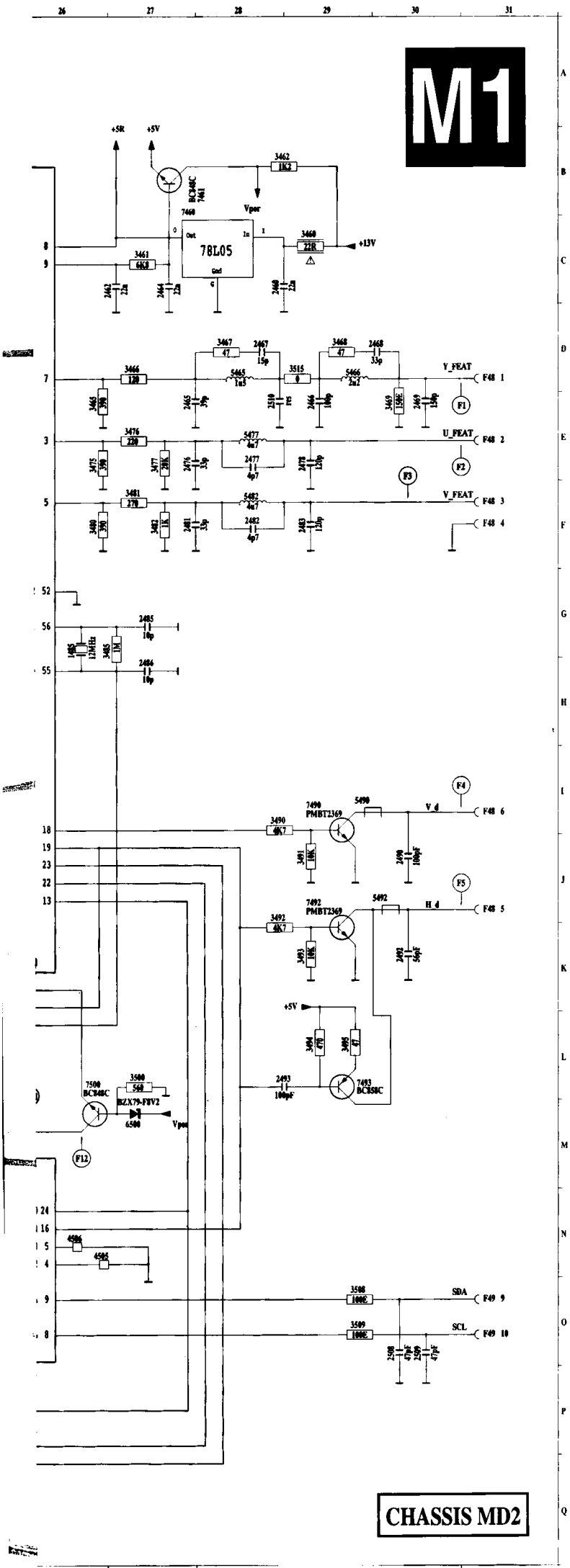

	1485	G26	7450	C23
	2375	C 1	7460	B27
	2376	C 2	7461	B28
	2377	C 5	7490	I29
	2378	C 5	7492	J29
	2379	C 6	7493	L29
A	2380	C 7	7500	L26
	2385	E 1	7504	P22
	2386	E 2	7505	N23
	2387	E 5	7506	O21
	2388	E 6	F48	O31
	2389	E 6	F48	R31
	2390	E 8	F48	F31
	2395	G 1	F48	F31
	2396	G 2	F48	J31
	2397	G 5	F48	I31
	2398	F 6	F48	K 1
	2399	G 6	F48	L 1
B	2400	G 8	F48	K 1
	2410	I 6	F49	O 1
	2411	H 7	F49	C 1
	2412	H 7	F49	E 1
	2413	H 7	F49	G 1
	2414	I 7	F49	D 1
	2415	L 7	F49	Q 1
	2419	K 7	F49	P 1
	2420	K 7	F49	O31
	2421	K 2	F49	O31
	2422	K 2	F67	B11
C	2423	L 1		
	2424	L 2		
	2425	L 2		
	2426	L 2		
	2430	O 2		
	2433	P 2		
	2435	Q 2		
	2440	K12		
	2441	K12		
	2445	A15		
D	2446	F15		
	2447	A20		
	2448	A15		
	2449	F15		
	2450	B23		
	2451	A24		
	2452	A24		
	2453	A25		
	2454	A25		
	2455	A24		
	2460	C28		
E	2462	C27		
	2464	C27		
	2465	E27		
	2466	E29		
	2467	D28		
	2468	D30		
	2469	E30		
	2476	E27		
	2477	E28		
	2478	E29		
	2481	F27		
F	2482	F28		
	2483	F29		
	2485	G27		
	2486	H27		
	2490	J30		
	2492	K30		
	2493	L29		
	2505	O22		
	2508	O30		
	2509	O30		
G	2510	E28		
	3370	C 7		
	3371	E 7		
	3372	G 7		
	3375	C 2		
	3376	C 3		
	3377	C 4		
	3378	C 4		
	3379	C 6		
	3380	C 7		
	3385	E 2		
H	3386	E 3		
	3387	E 4		
	3388	E 5		
	3389	E 5		
	3390	E 7		
	3395	G 2		
	3396	G 3		
	3397	G 4		
	3398	G 5		
	3399	G 5		
	3400	G 7		
I	3410	I 5		
	3411	I 6		
	3413	H 6		
	3414	I 7		
	3422	K 3		
	3430	O 2		
	3431	O 2		
	3432	N 3		
	3433	P 2		
	3434	O 2		
	3435	Q 2		
J	3436	Q 2		
	3450	I22		
	3451	J22		
	3452	I22		
	3453	J22		
	3460	C29		
	3461	C27		
	3462	B29		
	3465	E26		
	3466	D27		
K	3467	D28		
	3468	D29		
	3469	E30		
	3475	E26		
	3476	E27		
	3477	E27		
	3480	F26		
	3481	F27		
	3482	F27		
	3485	G27		
	3490	I28		
L	3491	I29		
	3492	J28		
	3493	K29		
	3494	L29		
	3495	L29		
	3500	L27		
	3502	M22		
	3503	M25		
	3504	P22		
	3505	Q22		
M	3506	O21		
	3507	O21		
	3508	O29		
	3509	O29		
	3510	L 8		
	3511	E16		
	3512	C 3		
	3513	E 3		
	3514	G 3		
	3515	D29		
	3998	M 5		
N	3999	N 5		
	4445	E13		
	4446	M13		
	4447	Q12		
	4505	N26		
	4506	N26		
	5377	C 5		
	5378	C 6		
	5388	E 6		
	5398	G 6		
	5420	J 7		
O	5421	J 2		
	5425	L 2		
	5440	J12		
	5445	A16		
	5446	F16		
	5447	A18		
	5453	A25		
	5454	A25		
	5465	D28		
	5466	D29		
	5477	E28		
P	5482	F28		
	5490	I29		
	5492	J30		
	5505	N22		
	6500	M27		
	6501	C 3		
	7376	C 3		
	7380	C 6		
	7386	E 3		
	7390	E 6		
	7396	F 3		
	7400	G 6		
Q	7432	N 2		
	7440	B 8		
	7441	B 9		
	7445	C15		
	7446	G15		
	7447	C18		

Feature Box (Digital Scan) panel /

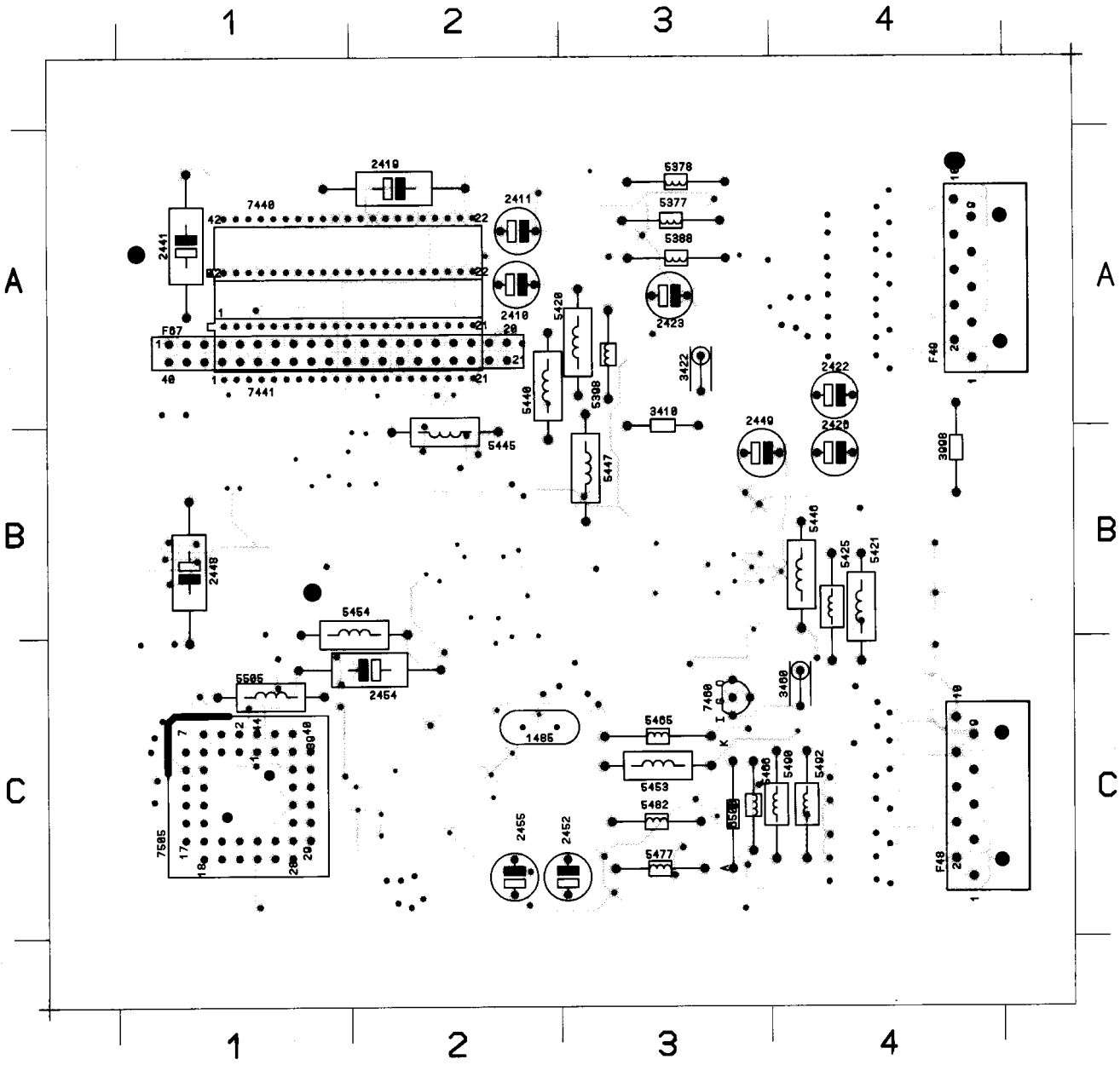

1485 C 2	2419 A 1	2426 B 4	2449 B 3	2455 C 2	3460 C 4	5378 A 3	5420 A 3	5440 B 2	5447 A 3	5465 C 3	5482 C 3	5505 C 1	7441 A 1	F48 C 4
2410 A 2	2422 A 4	2441 A 1	2452 C 3	3410 A 3	3998 B 4	5388 A 3	5421 C 4	5445 B 2	5453 C 3	5466 C 3	5490 C 4	6500 C 3	7460 C 3	F49 A 4
2411 A 2	2423 A 3	2448 B 1	2454 C 2	3422 A 3	5377 A 3	5398 A 3	5425 C 4	5446 B 4	5454 B 1	5477 C 3	5492 C 4	7440 A 1	7505 C 1	F07 A 1

F1

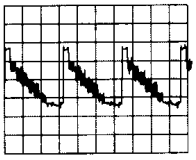

100mV/div
10µs/div

F2

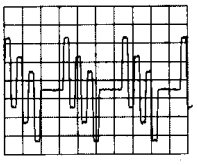

200mV/div
10µs/div

F3

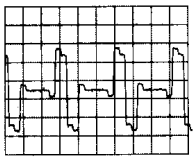

200mV/div
10µs/div

F4

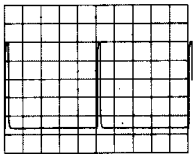

1V/div
2ms/div

F5

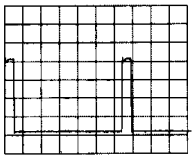

1V/div
5µs/div

F6

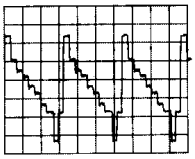

200mV/div
20µs/div

F7

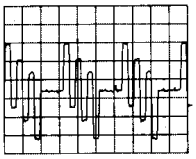

200mV/div
20µs/div

F8

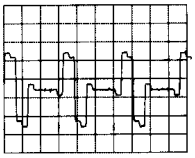

200mV/div
20µs/div

F9

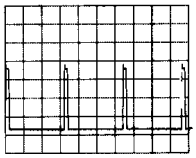

1V/div
20µs/div

F10

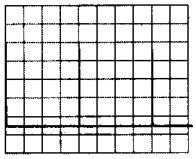

1V/div
5ms/div

F16

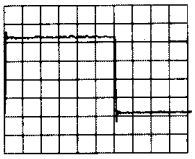

1V/div
0.5µs/div

F17

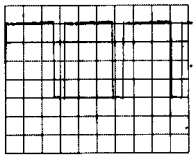

1V/div
20µs/div

F18

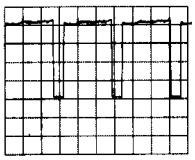

1V/div
10µs/div

F19

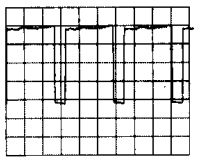

1V/div
10µs/div

F20

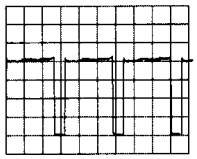

1V/div
10µs/div

F11

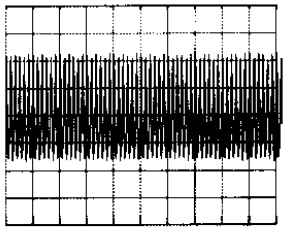

1V/div
0.5µs/div

F12

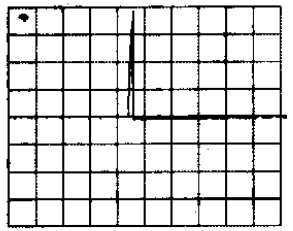

1V/div
50ms/div

F13

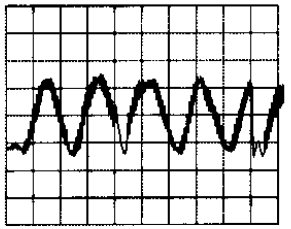

500V/div
50ns/div

F14

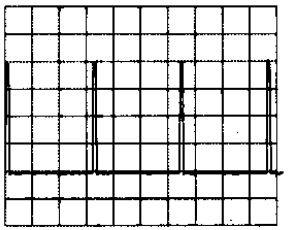

1V/div
20µs/div

F15

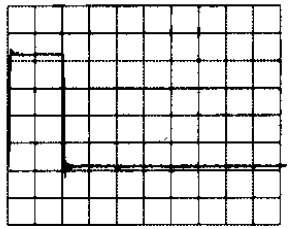

1V/div
0.5µs/div

F21

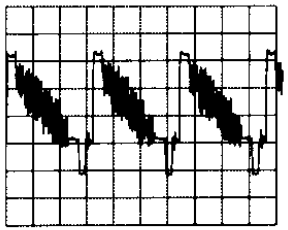

200mV/div
20µs/div

F22

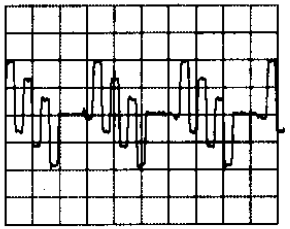

200mV/div
20µs/div

F23

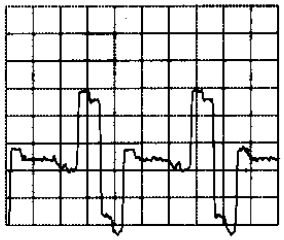

200mV/div
20µs/div

PCS 91 167

Feature box 3 (digital scan) M1

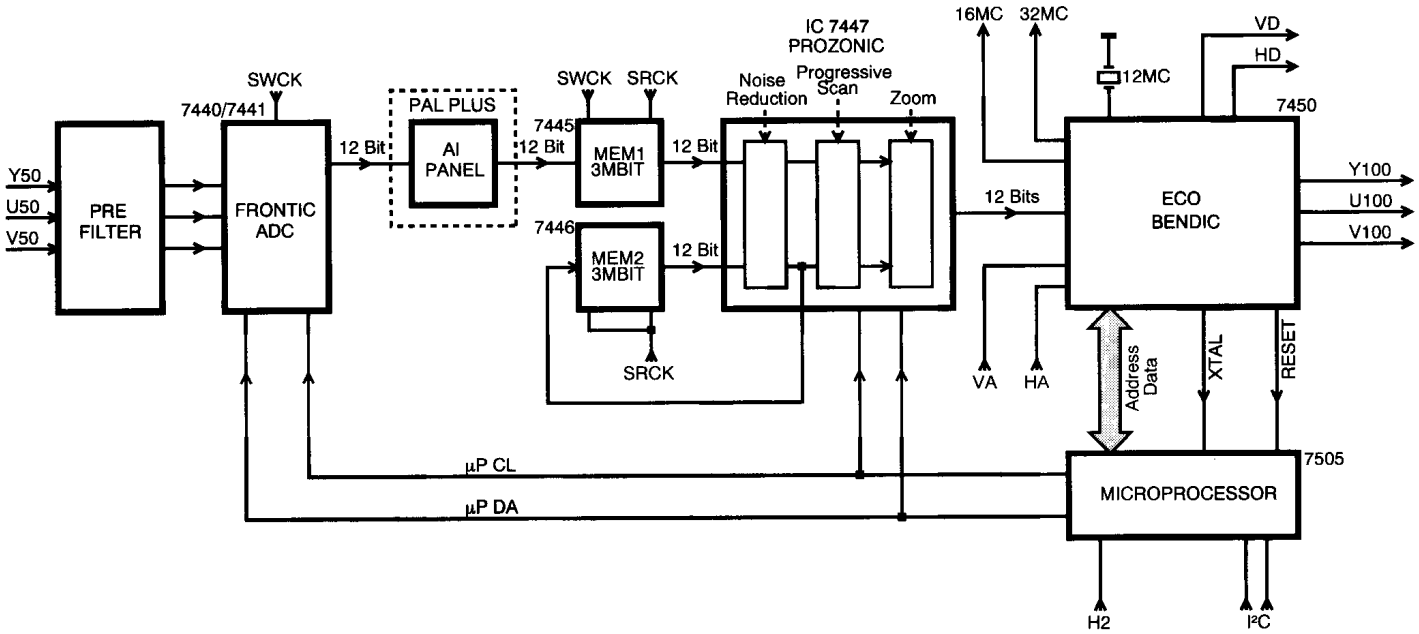

FBX3

66532024_016B.AI
080396

Feature box 4 (ECO) M2

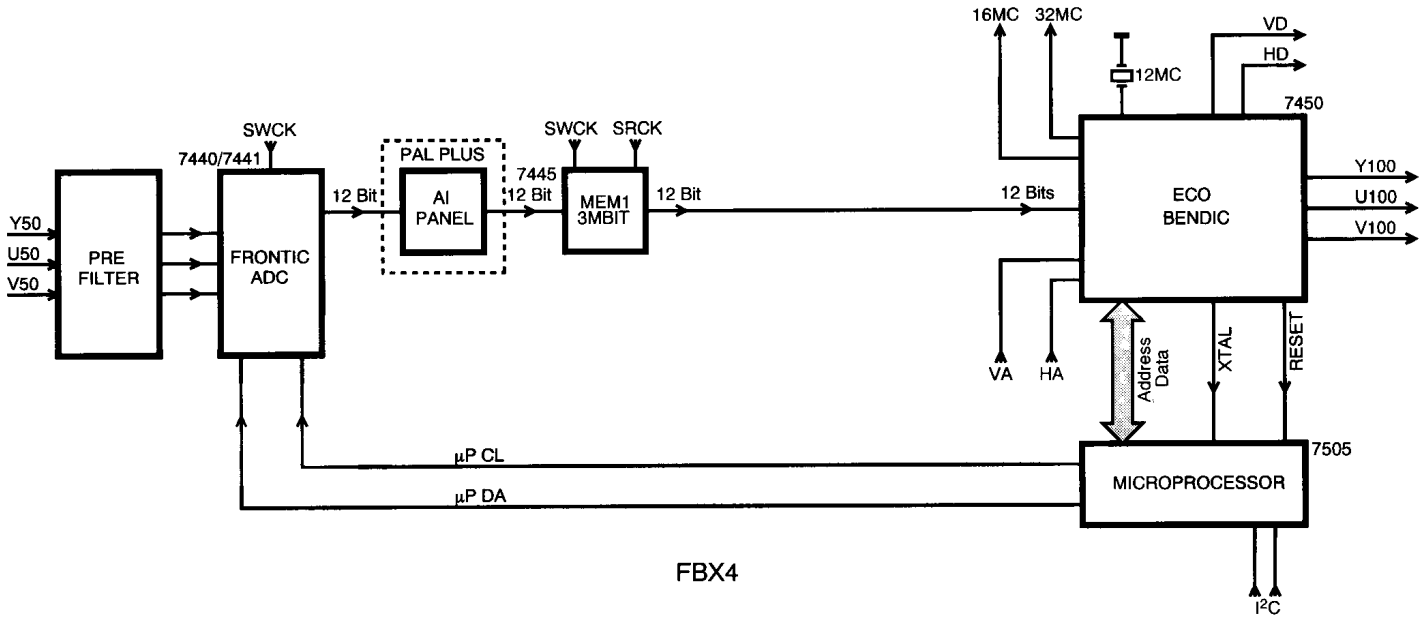

FBX4

76532013_006.AI
190297

Schaltbilder der ICs in den Feature-Boxen /

Prozinic SAA 4990 (IC7447 Feature box digital scan) M1

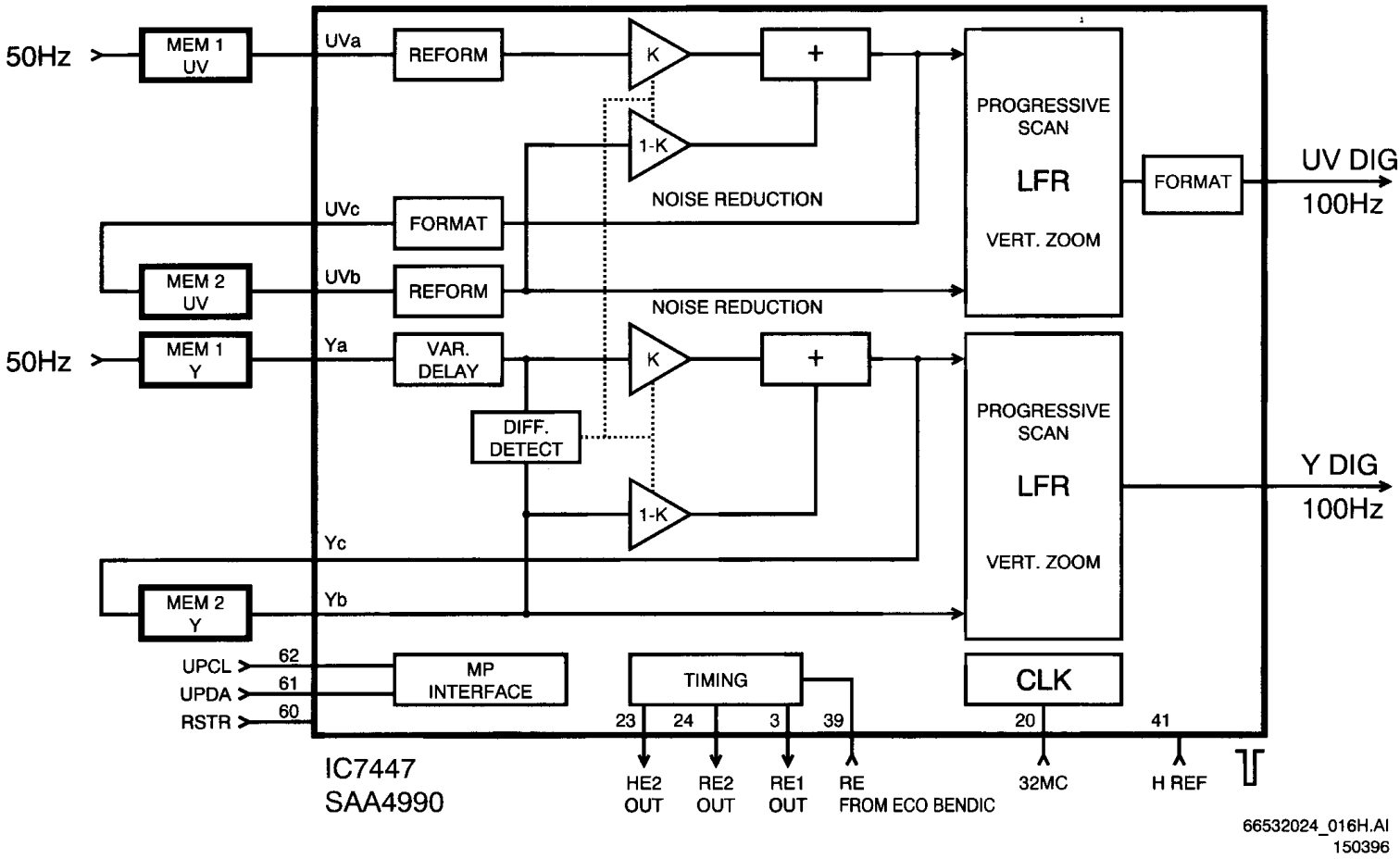

MELZONIC SAA 4991 (IC 7447 Feature box natural motion) M1

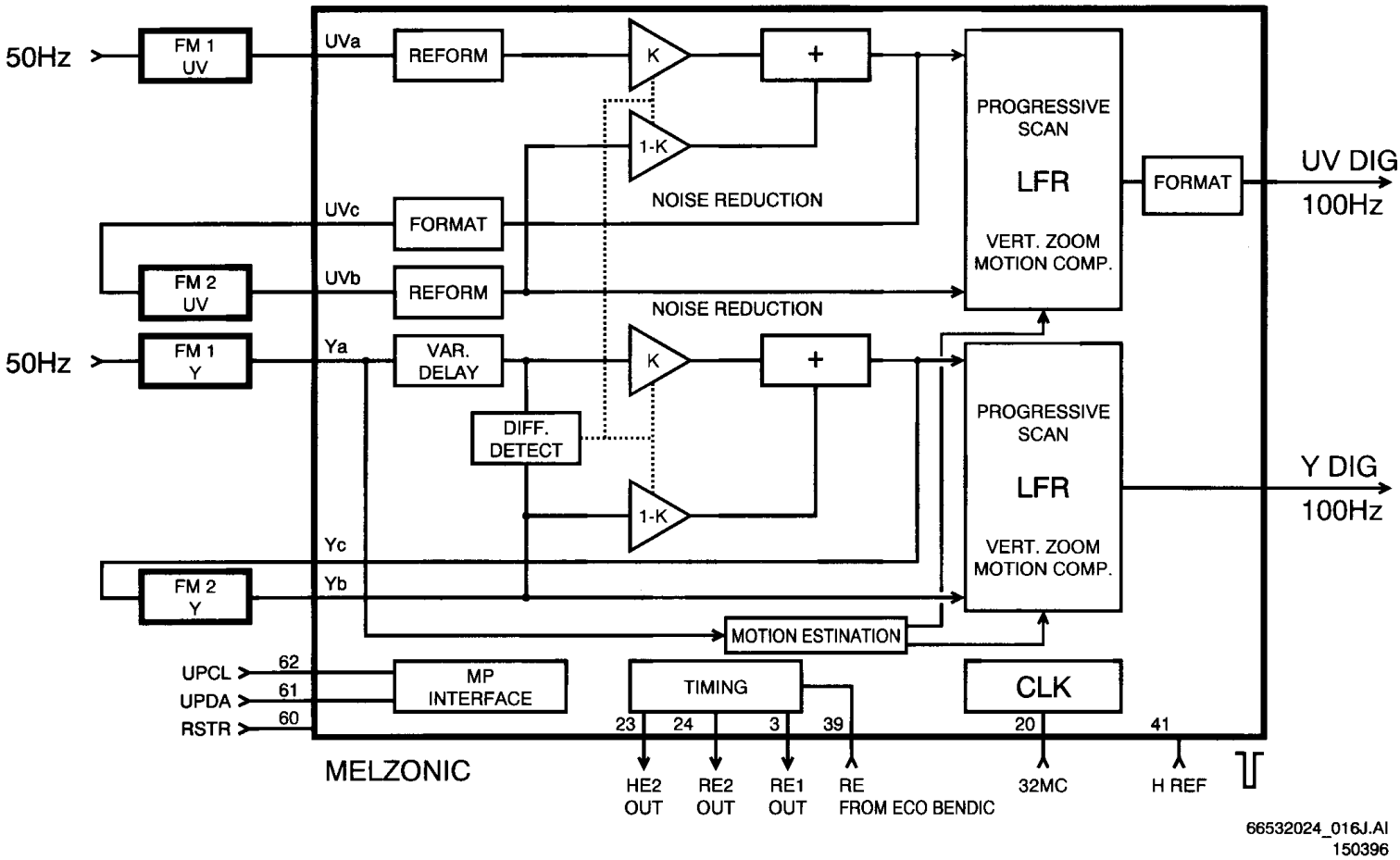

Diagrammes synoptiques des CI

FRONTIC TDA 8753 (IC 7440/7441 in both feature boxes) M1 / M2

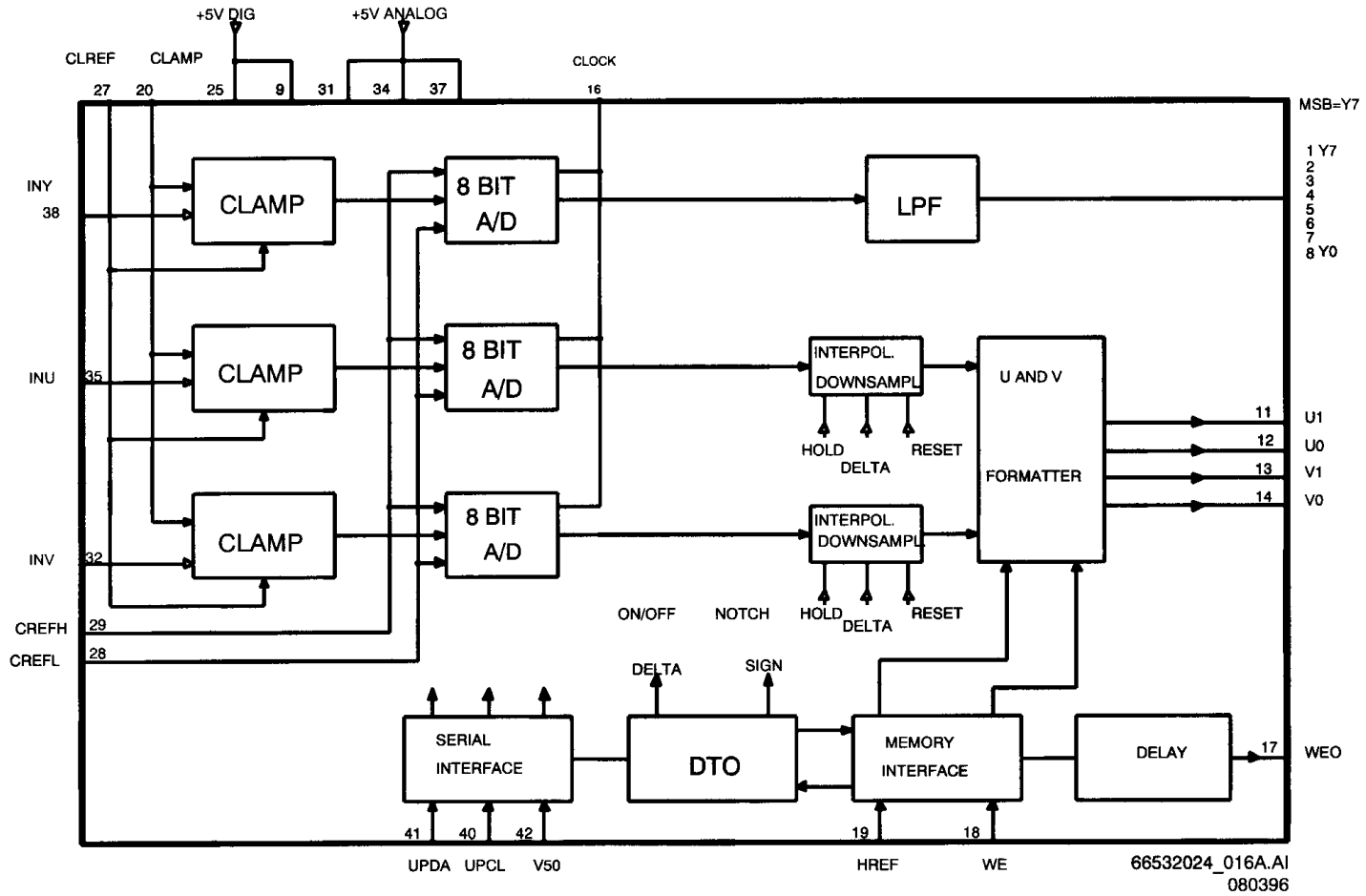

BENDIC SAA 4970 (IC 7450 in both feature boxes) M1 / M2

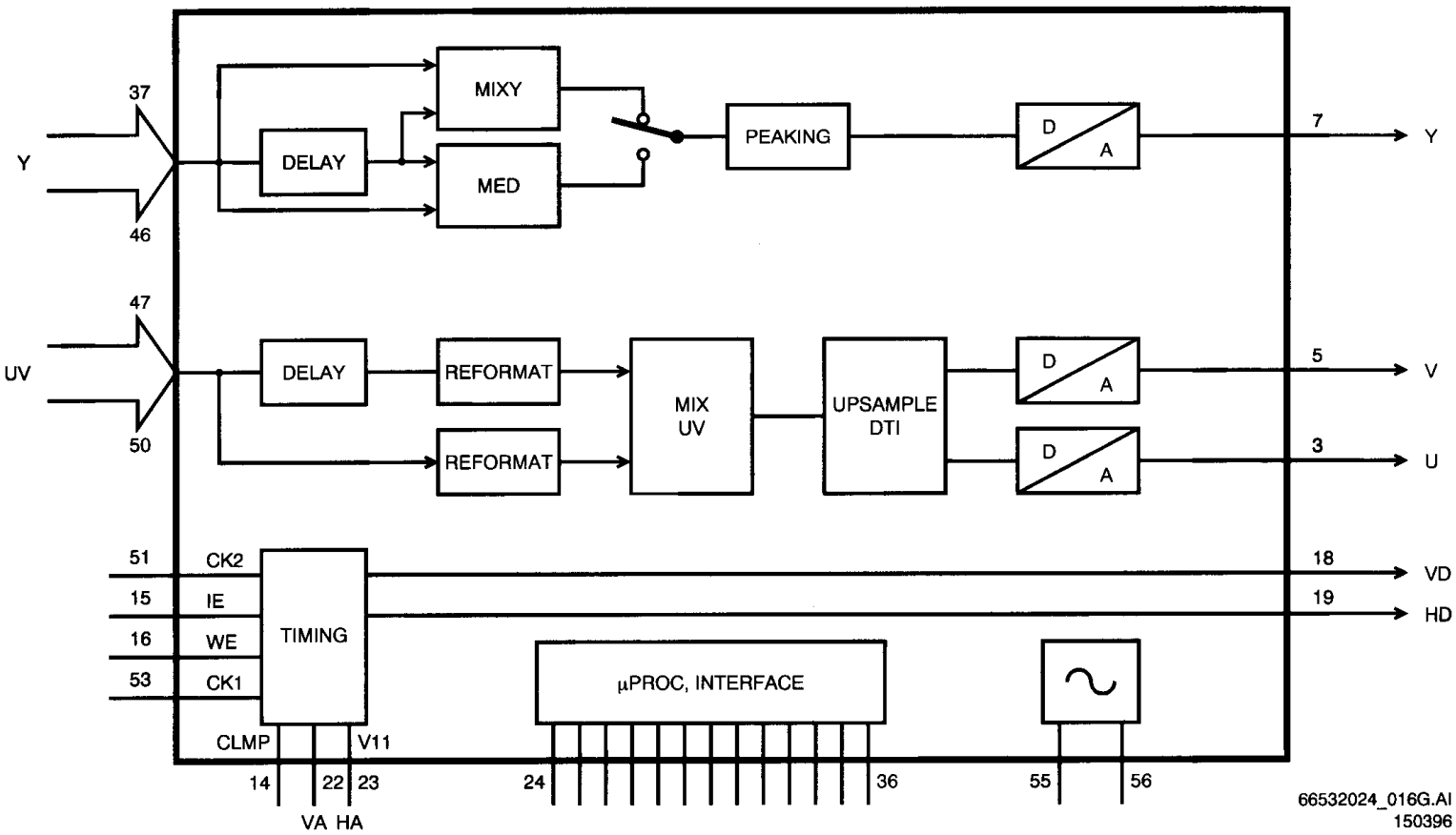

dans les boîtes de fonctions

LIMERIC QFP44 (IC7005 on AI panel) N

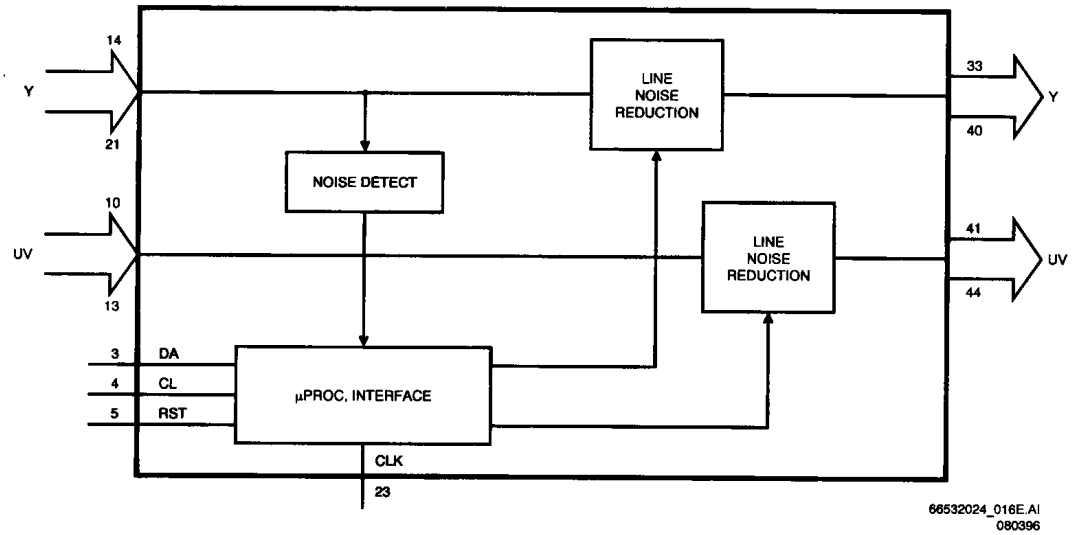

SMARTIC QFP80 (IC7008 on AI panel) N

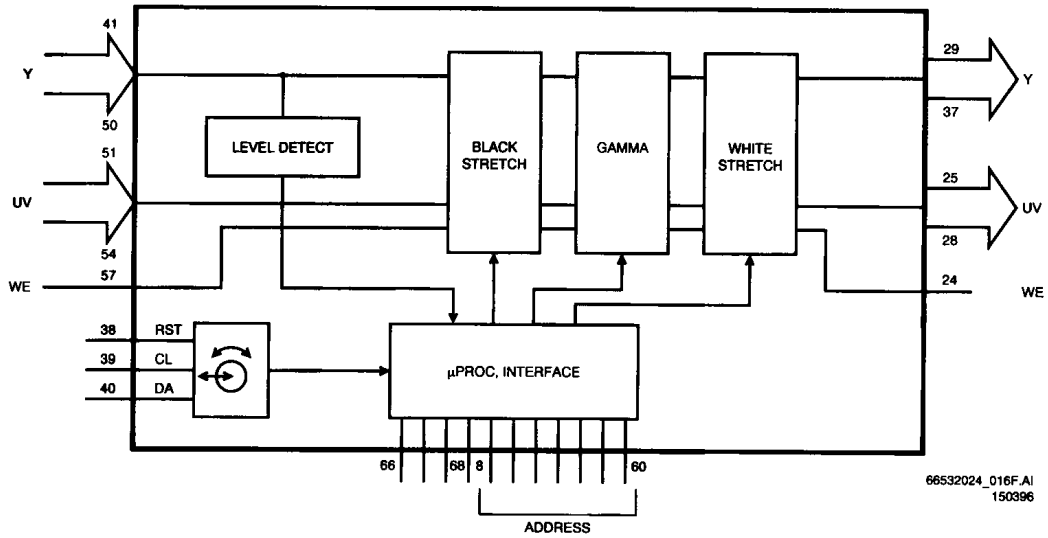

PANIC PLC44 (IC7010 on AI panel) N

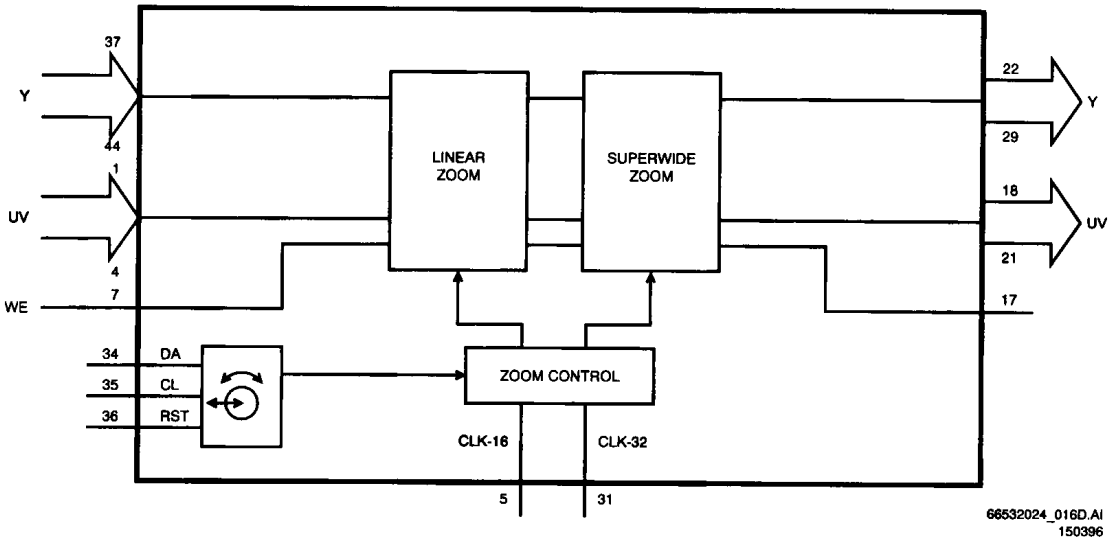

F1

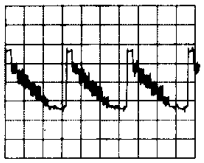

100mV/div
10µs/div

F2

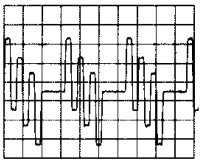

200mV/div
10µs/div

F3

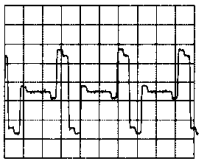

200mV/div
10µs/div

F4

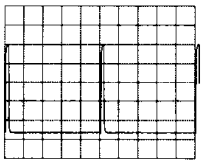

1V/div
2ms/div

F5

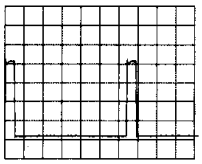

1V/div
5µs/div

F6

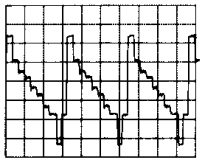

200mV/div
20µs/div

F7

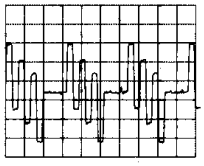

200mV/div
20µs/div

F8

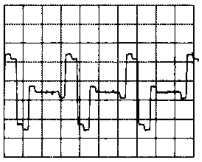

200mV/div
20µs/div

F9

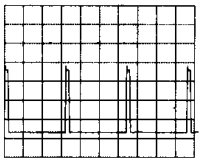

1V/div
20µs/div

F10

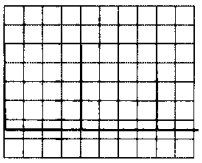

1V/div
5ms/div

F16

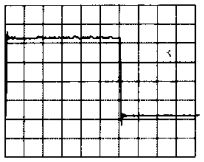

1V/div
0.5µs/div

F17

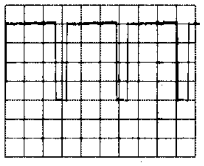

1V/div
20µs/div

F18

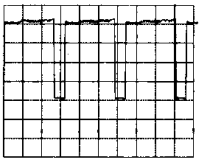

1V/div
10µs/div

F19

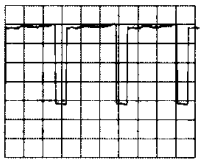

1V/div
10µs/div

F20

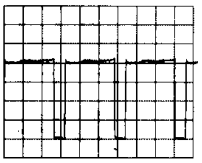

1V/div
10µs/div

PCS 91 170

F11

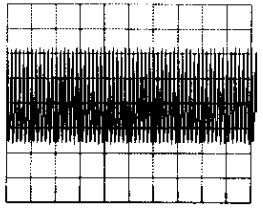

1V/div
0.5µs/div

F12

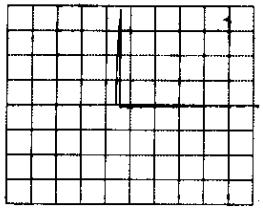

1V/div
50ms/div

F13

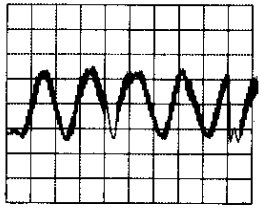

500V/div
50ns/div

F14

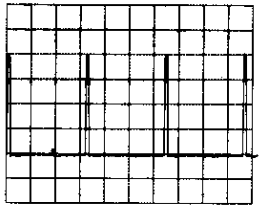

1V/div
20µs/div

F15

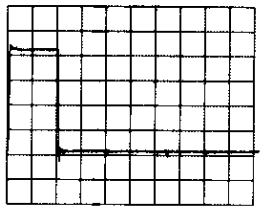

1V/div
0.5µs/div

F21

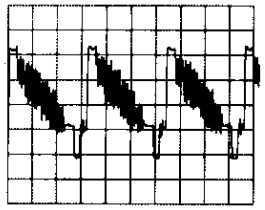

200mV/div
20µs/div

F22

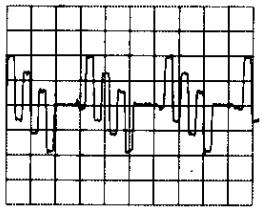

200mV/div
20µs/div

F23

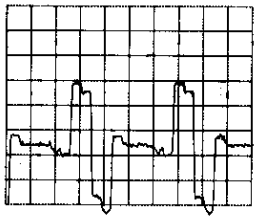

200mV/div
20µs/div

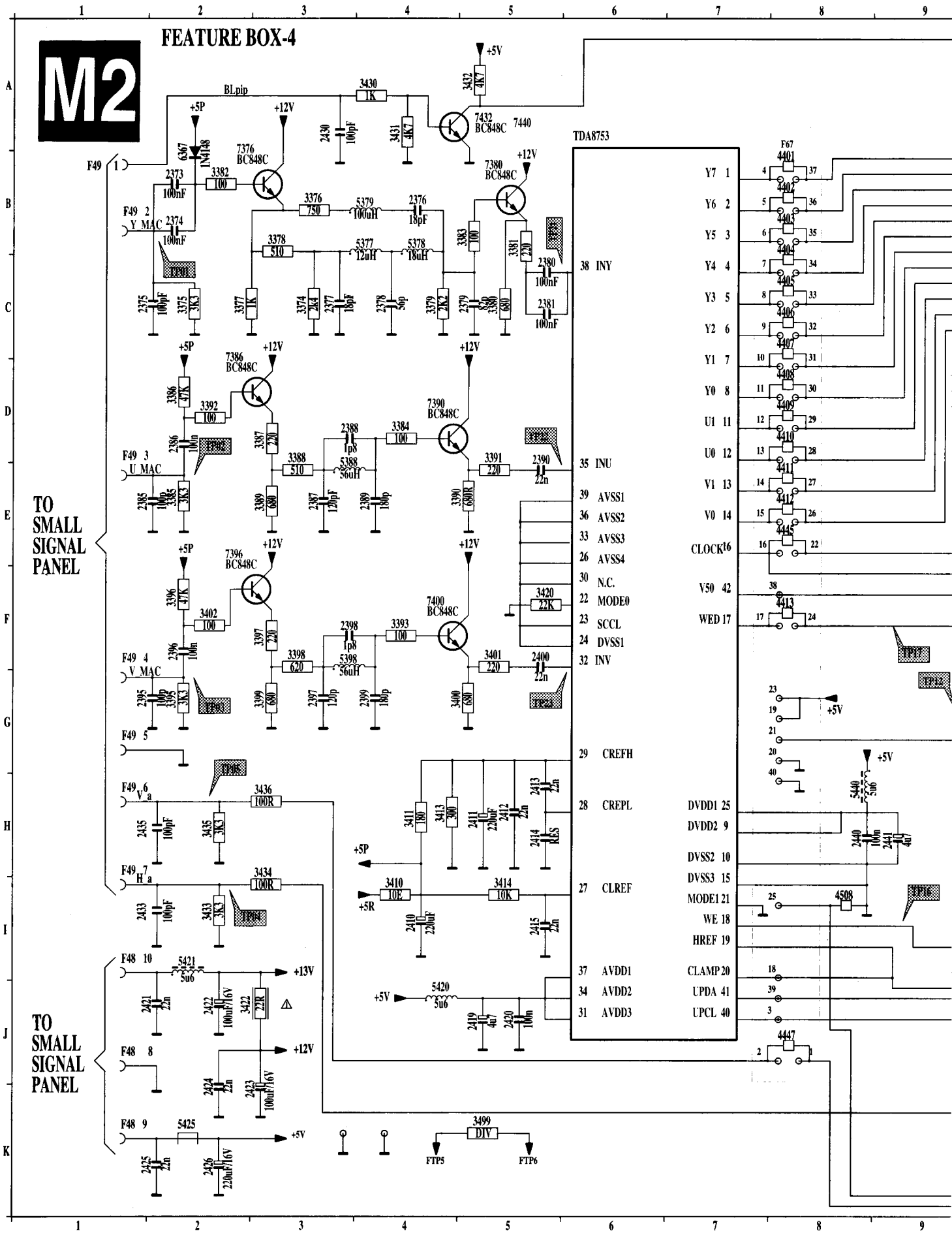
M2
FEATURE BOX-4
TO SMALL SIGNAL PANEL
TO SMALL SIGNAL PANEL
TDA8753
BLpip
F49 1
F49 2 Y_MAC
F49 3 U_MAC
F49 4 V_MAC
F49 5
F49 6 Va
F49 7 Ha
F48 10
F48 8
F48 9
F67
7432 BC848C
7376 BC848C
7380 BC848C
7386 BC848C
7390 BC848C
7396 BC848C
7400 BC848C
35 INU
38 INY
39 AVSS1
36 AVSS2
33 AVSS3
26 AVSS4
30 N.C.
22 MODE0
23 SCCL
24 DVSS1
32 INV
29 CREFH
28 CREPL
27 CLREF
37 AVDD1
34 AVDD2
31 AVDD3
Y7 1
Y6 2
Y5 3
Y4 4
Y3 5
Y2 6
Y1 7
Y0 8
U1 11
U0 12
V1 13
V0 14
CLOCK 16
V50 42
WED 17
DVDD1 25
DVDD2 9
DVSS2 10
DVSS3 15
MODE1 21
WE 18
HREF 19
CLAMP 20
UPDA 41
UPCL 40
FTP5
FTP6

Feature-Box-Platine (Natürliche Bewegung) /

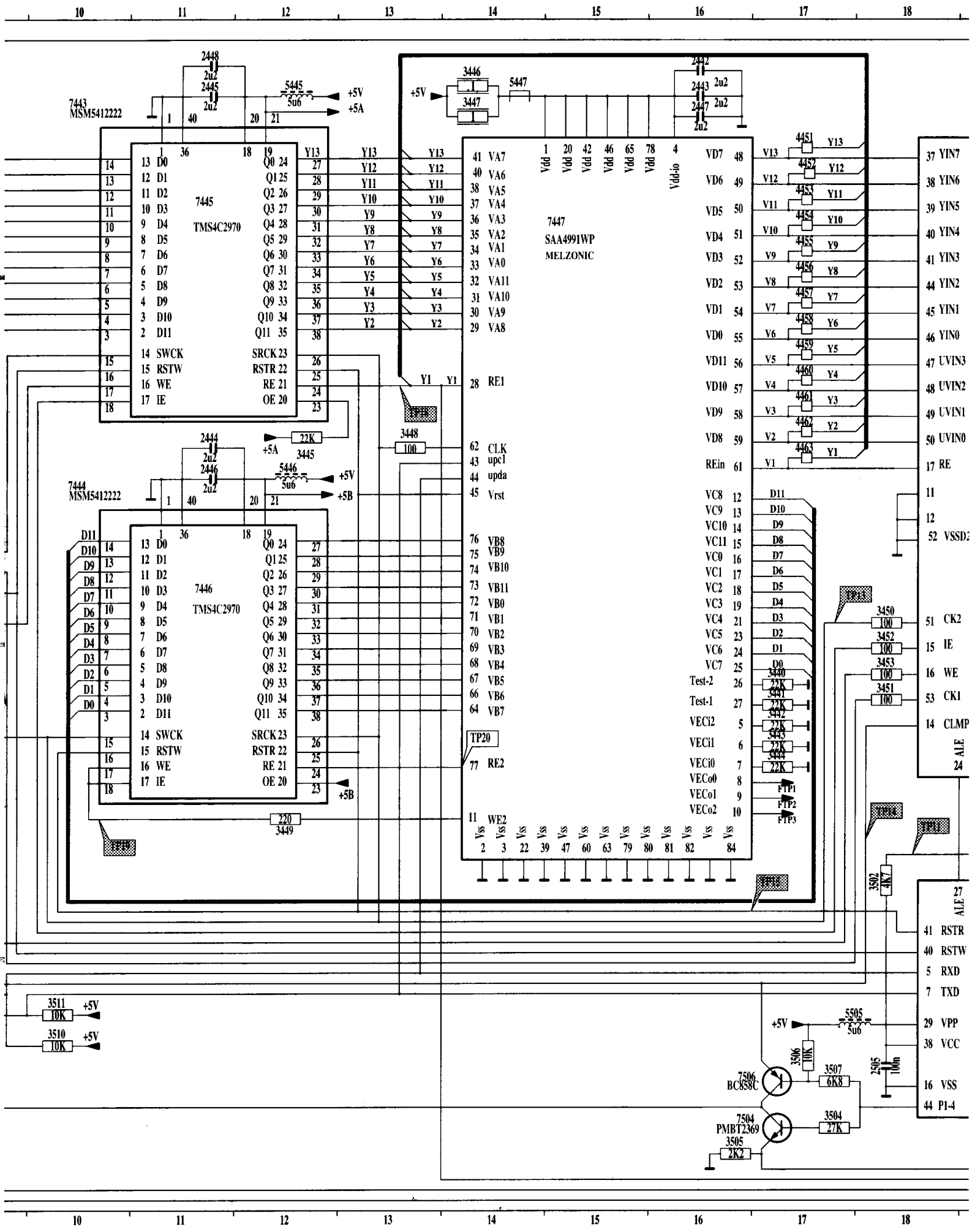

Platine Boîtier Numérique (mouvement natural)

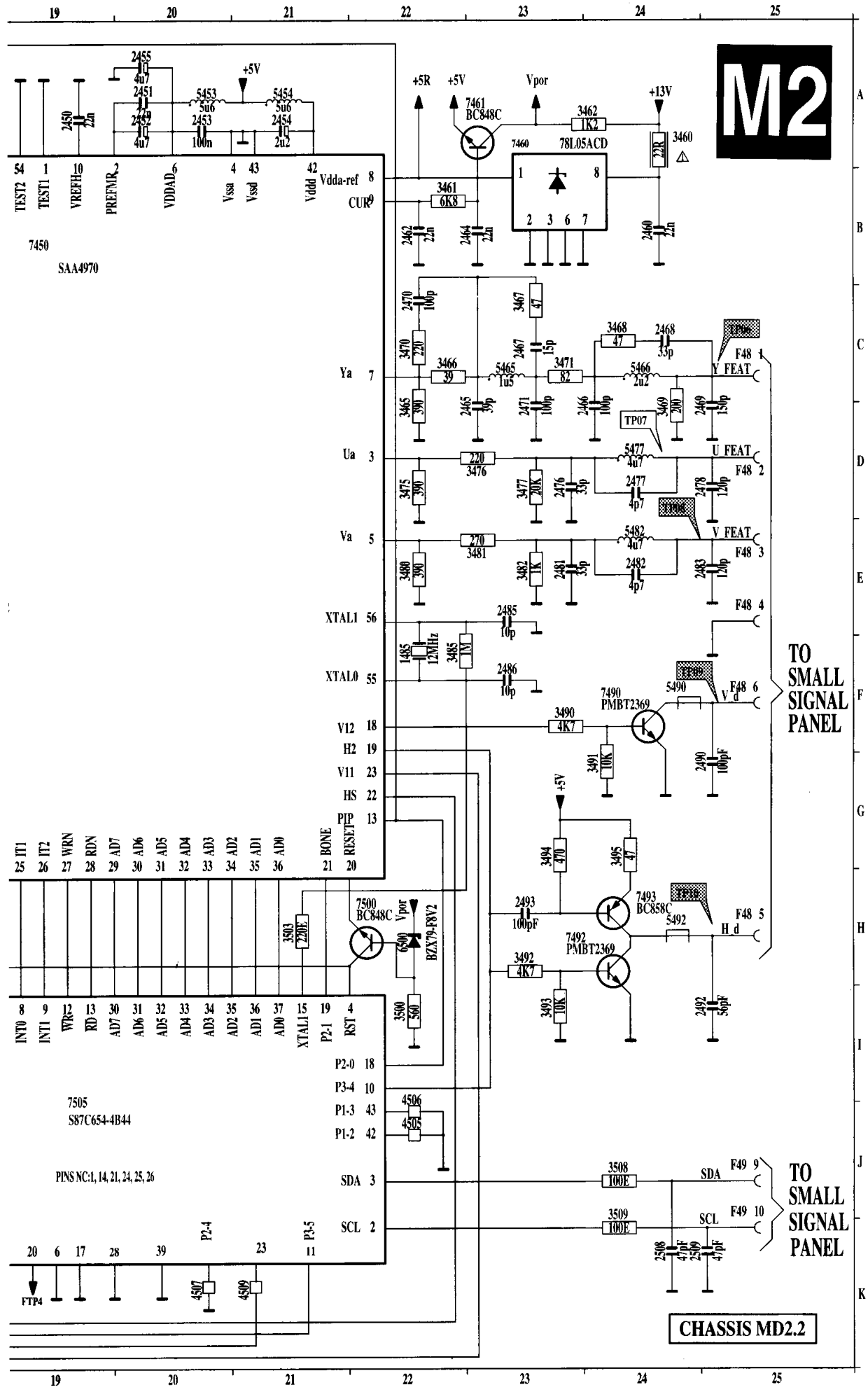

AI (Artificial Intelligence) panel /

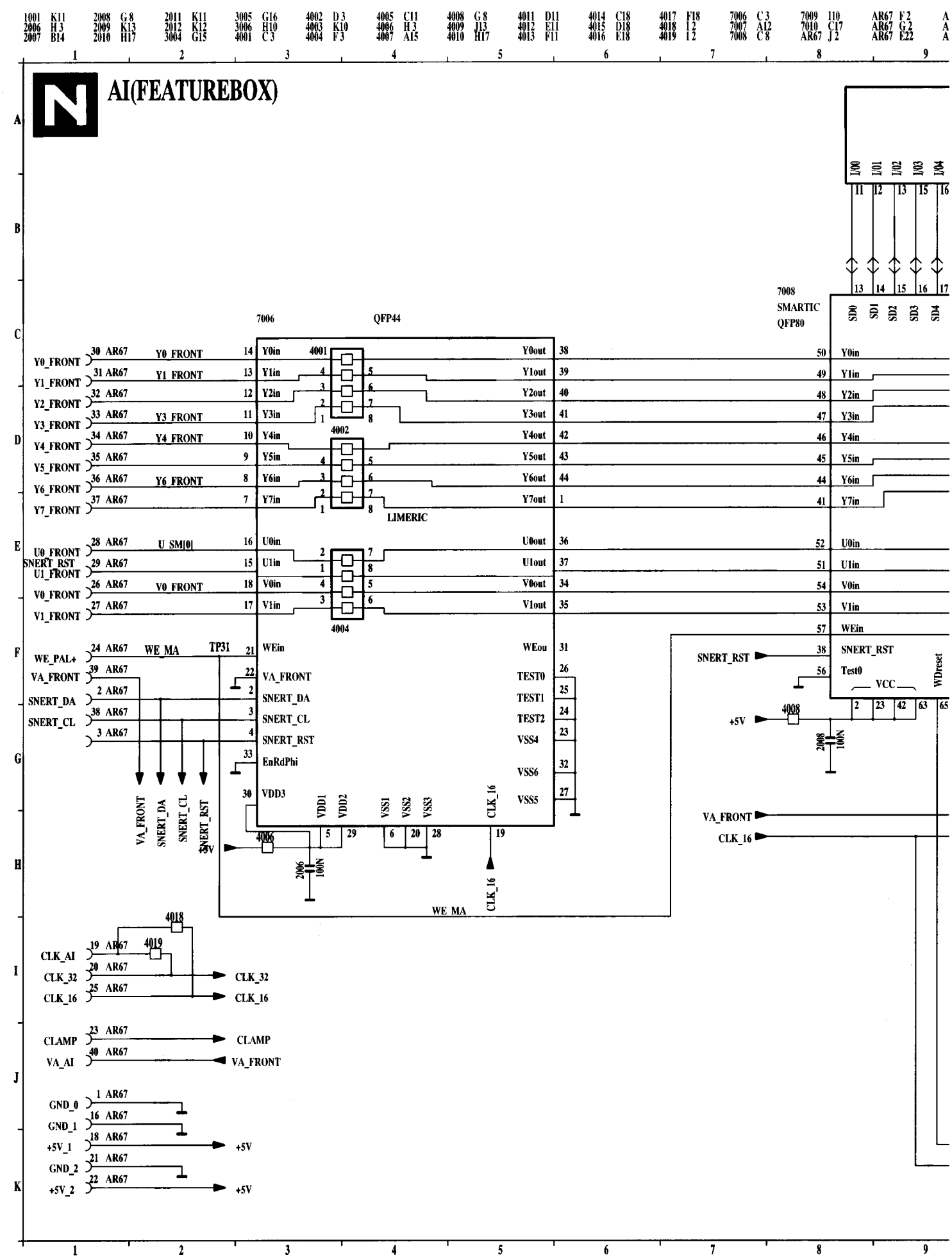

AI-(Künstliche Intelligenz)-Platine /

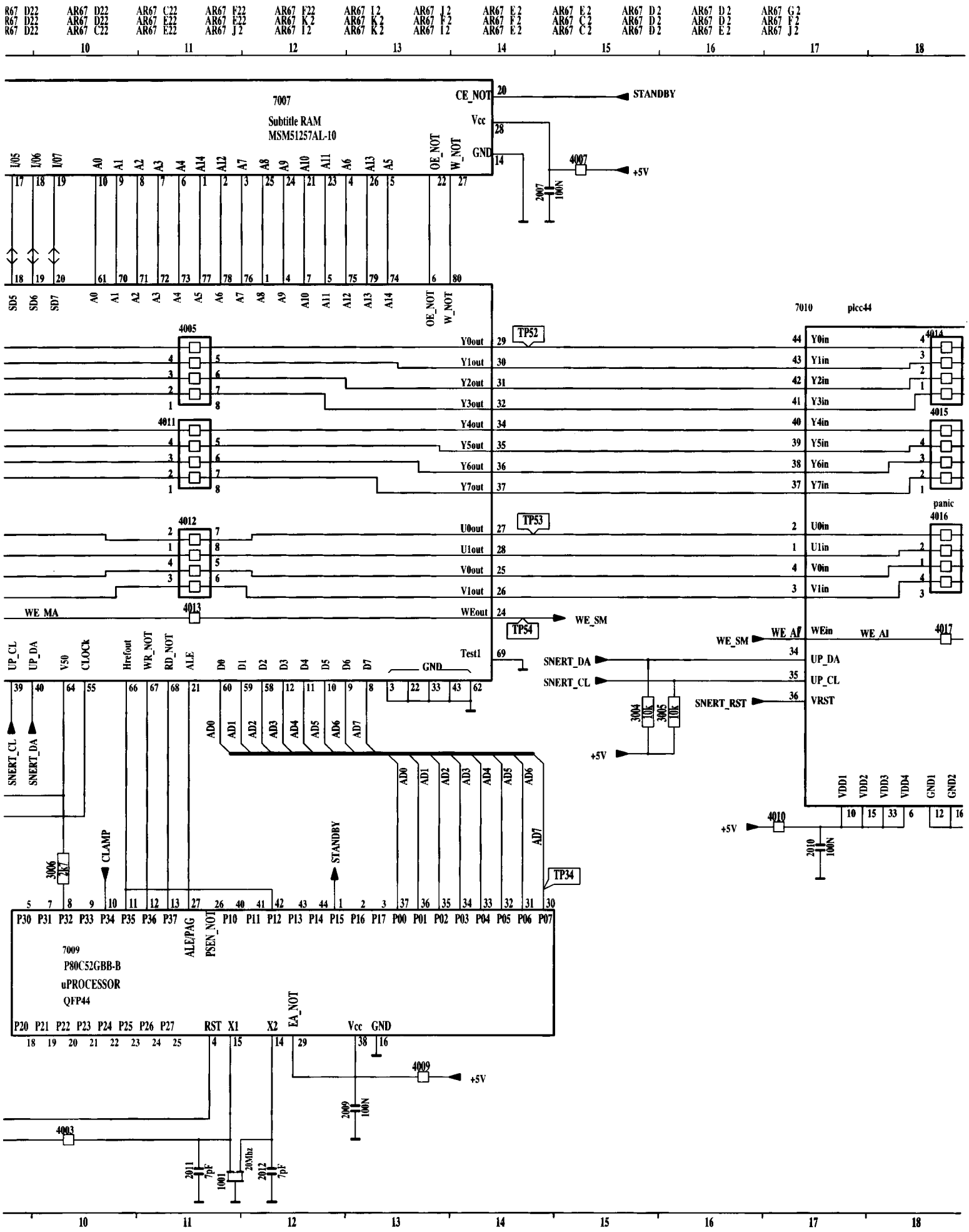

Platine AI (Intelligence Artificielle)

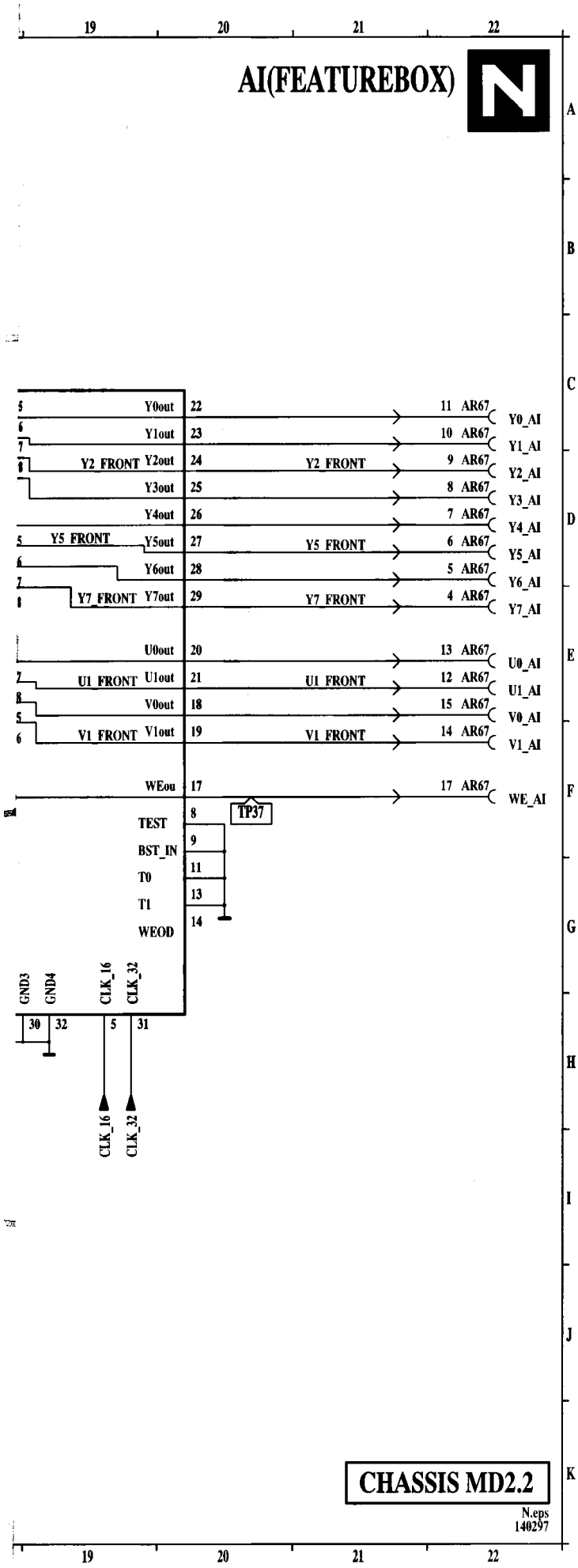

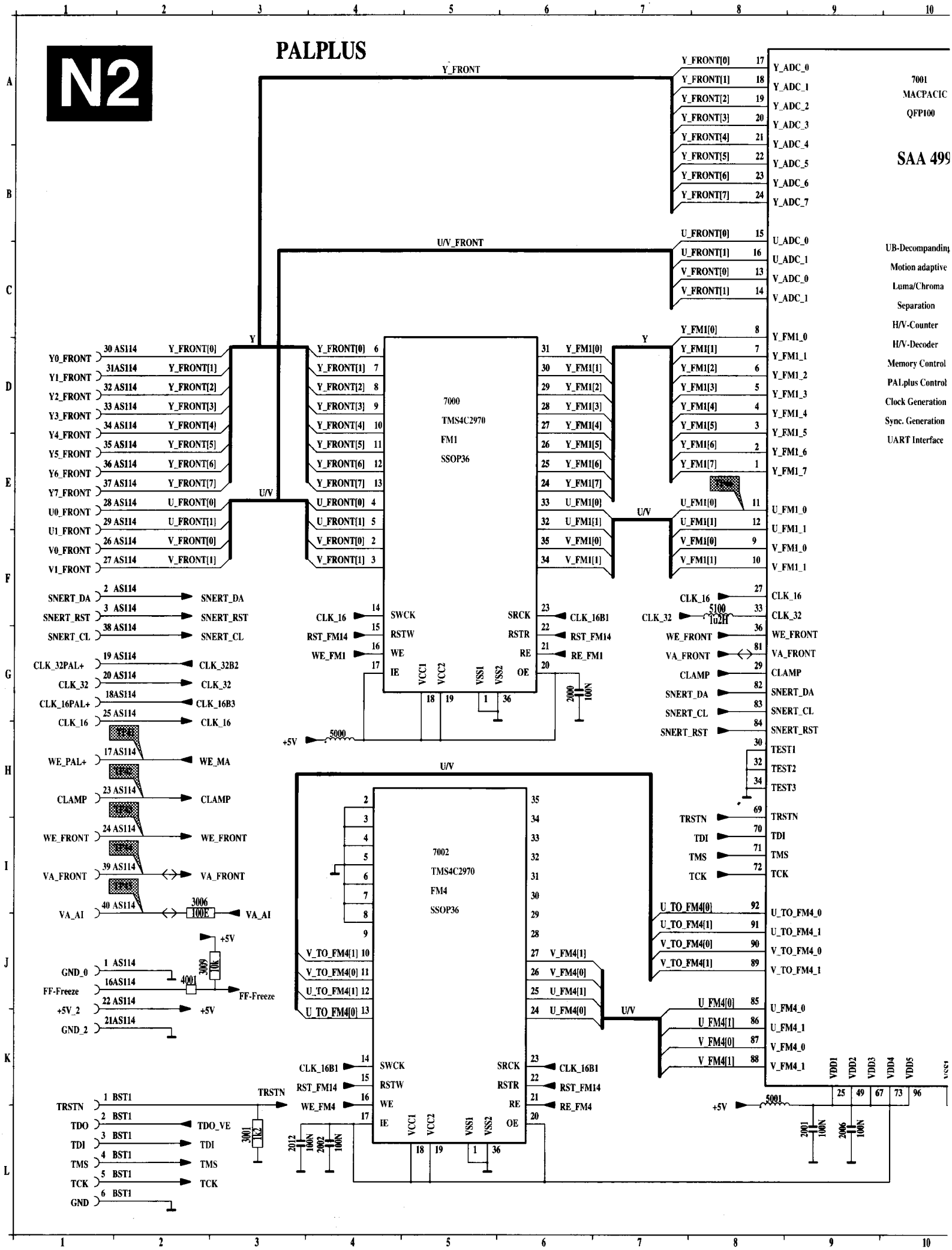
N2
PALPLUS
Y_FRONT
U/V_FRONT
7001
MACPACIC
QFP100
SAA 499
UB-Decompanding
Motion adaptive
Luma/Chroma
Separation
H/V-Counter
H/V-Decoder
Memory Control
PALplus Control
Clock Generation
Sync. Generation
UART Interface
7000
TMS4C2970
FM1
SSOP36
7002
TMS4C2970
FM4
SSOP36
Y0_FRONT
Y1_FRONT
Y2_FRONT
Y3_FRONT
Y4_FRONT
Y5_FRONT
Y6_FRONT
Y7_FRONT
U0_FRONT
U1_FRONT
V0_FRONT
V1_FRONT
SNERT_DA
SNERT_RST
SNERT_CL
CLK_32PAL+
CLK_32
CLK_16PAL+
CLK_16
WE_PAL+
CLAMP
WE_FRONT
VA_FRONT
VA_AI
GND_0
FF-Freeze
+5V_2
GND_2
TRSTN
TDO
TDI
TMS
TCK
GND
TDO_VE
+5V
CLK_16B1
RST_FM14
WE_FM1
WE_FM4
CLK_32B2
CLK_16B3
WE_MA
SWCK
RSTW
WE
IE
SRCK
RSTR
RE
OE
VCC1
VCC2
VSS1
VSS2
Y_FRONT[0]
Y_FRONT[1]
Y_FRONT[2]
Y_FRONT[3]
Y_FRONT[4]
Y_FRONT[5]
Y_FRONT[6]
Y_FRONT[7]
U_FRONT[0]
U_FRONT[1]
V_FRONT[0]
V_FRONT[1]
Y_FM1[0]
Y_FM1[1]
Y_FM1[2]
Y_FM1[3]
Y_FM1[4]
Y_FM1[5]
Y_FM1[6]
Y_FM1[7]
U_FM1[0]
U_FM1[1]
V_FM1[0]
V_FM1[1]
U_TO_FM4[0]
U_TO_FM4[1]
V_TO_FM4[0]
V_TO_FM4[1]
U_FM4[0]
U_FM4[1]
V_FM4[0]
V_FM4[1]
Y_ADC_0
Y_ADC_1
Y_ADC_2
Y_ADC_3
Y_ADC_4
Y_ADC_5
Y_ADC_6
Y_ADC_7
U_ADC_0
U_ADC_1
V_ADC_0
V_ADC_1
Y_FM1_0
Y_FM1_1
Y_FM1_2
Y_FM1_3
Y_FM1_4
Y_FM1_5
Y_FM1_6
Y_FM1_7
U_FM1_0
U_FM1_1
V_FM1_0
V_FM1_1
CLK_16
CLK_32
WE_FRONT
VA_FRONT
CLAMP
SNERT_DA
SNERT_CL
SNERT_RST
TEST1
TEST2
TEST3
TRSTN
TDI
TMS
TCK
U_TO_FM4_0
U_TO_FM4_1
V_TO_FM4_0
V_TO_FM4_1
U_FM4_0
U_FM4_1
V_FM4_0
V_FM4_1
VDD1
VDD2
VDD3
VDD4
VDD5
VSS1
Y
U/V

Platine PALplus

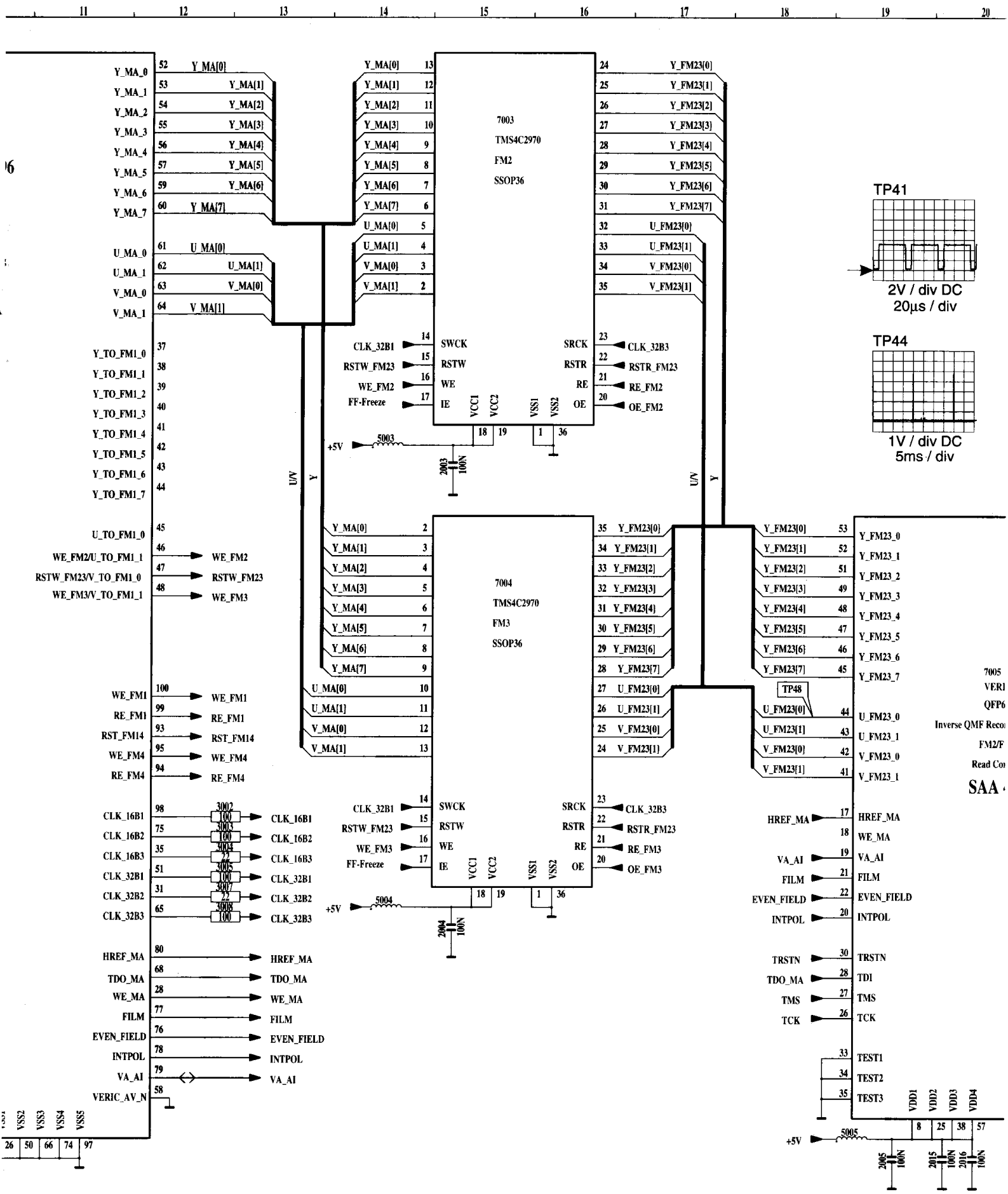

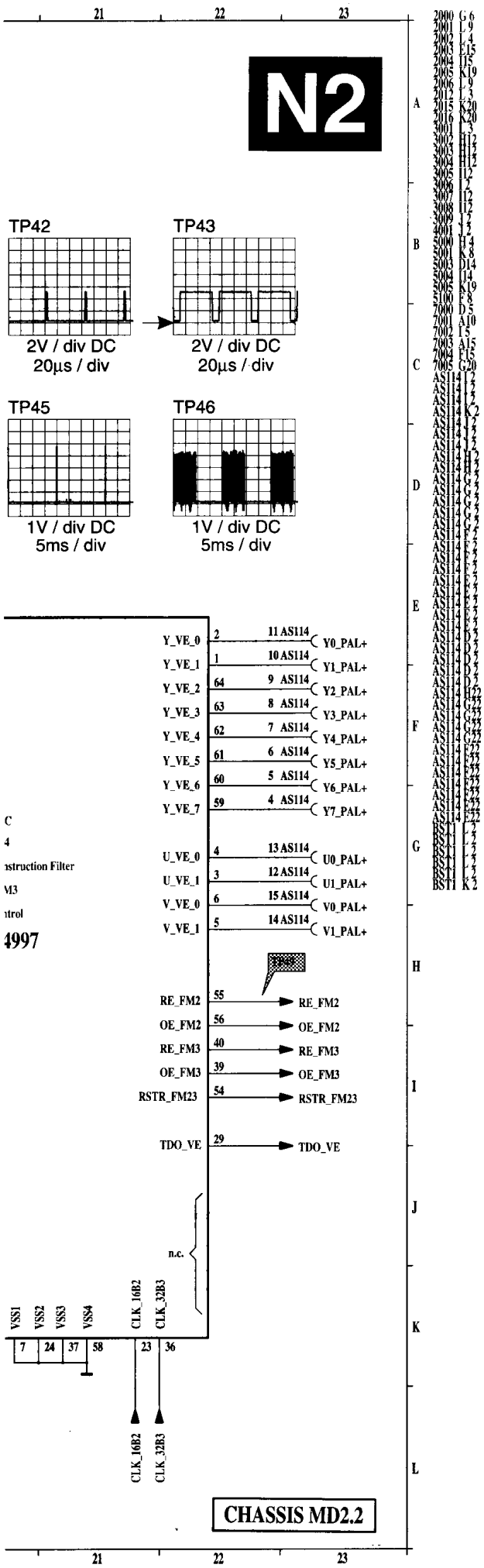
N2
TP42
2V / div DC
20µs / div
TP43
2V / div DC
20µs / div
TP45
1V / div DC
5ms / div
TP46
1V / div DC
5ms / div
Y_VE_0 2 11 AS114 Y0_PAL+
Y_VE_1 1 10 AS114 Y1_PAL+
Y_VE_2 64 9 AS114 Y2_PAL+
Y_VE_3 63 8 AS114 Y3_PAL+
Y_VE_4 62 7 AS114 Y4_PAL+
Y_VE_5 61 6 AS114 Y5_PAL+
Y_VE_6 60 5 AS114 Y6_PAL+
Y_VE_7 59 4 AS114 Y7_PAL+
U_VE_0 4 13 AS114 U0_PAL+
U_VE_1 3 12 AS114 U1_PAL+
V_VE_0 6 15 AS114 V0_PAL+
V_VE_1 5 14 AS114 V1_PAL+
RE_FM2 55 RE_FM2
OE_FM2 56 OE_FM2
RE_FM3 40 RE_FM3
OE_FM3 39 OE_FM3
RSTR_FM23 54 RSTR_FM23
TDO_VE 29 TDO_VE
n.c.
VSS1 VSS2 VSS3 VSS4
7 24 37 58
CLK_16B2 CLK_32B3
23 36
CLK_16B2 CLK_32B3
CHASSIS MD2.2
4997

Audio module (no dolby) /

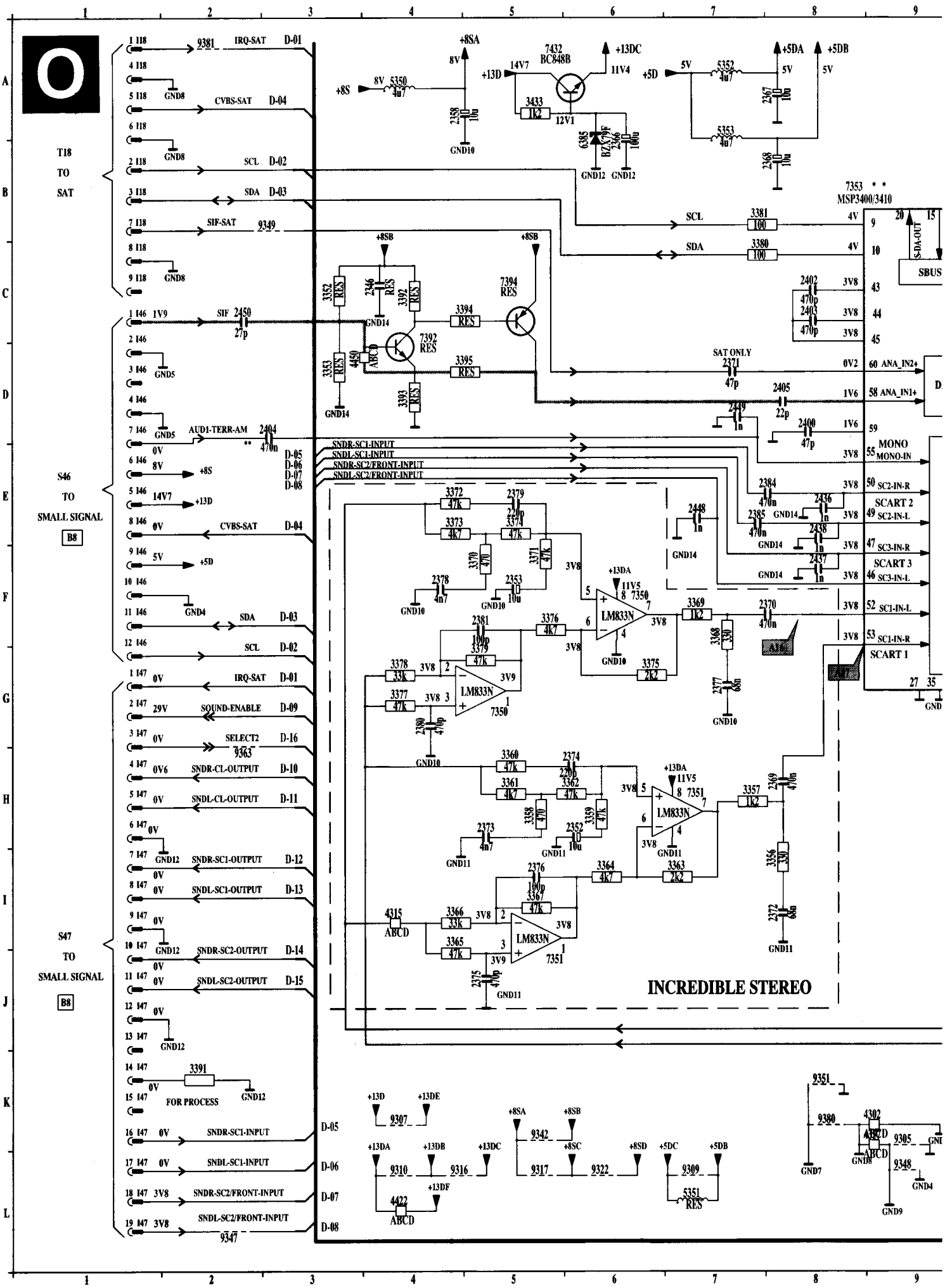

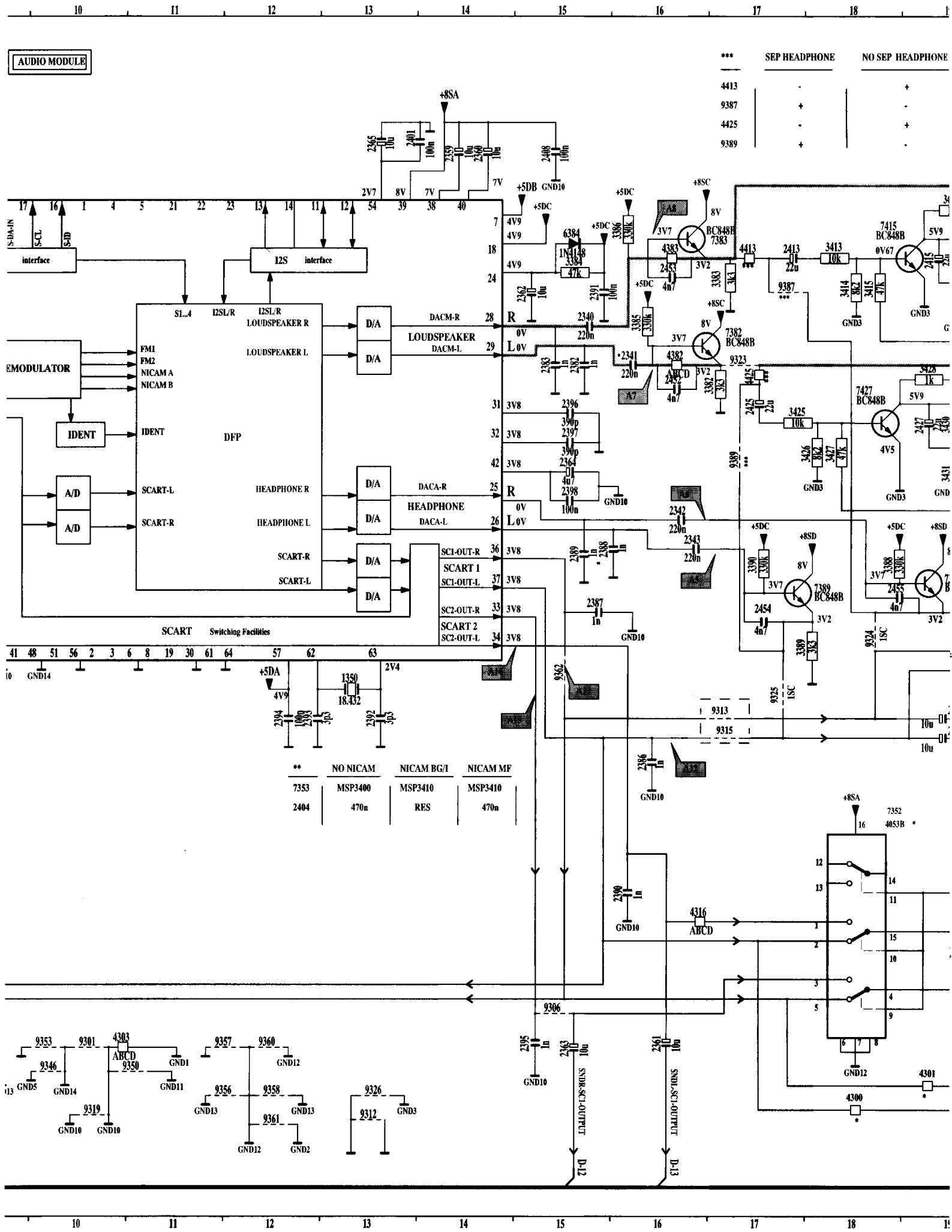
AUDIO MODULE
*** SEP HEADPHONE NO SEP HEADPHONE
4413 - +
9387 + -
4425 - +
9389 + -
+8SA
+5DB
+5DC
+8SC
+8SD
+5DA
GND10
GND14
GND3
GND12
interface
I2S interface
S-DA-IN
S-CL
S-ID
S1..4
I2SL/R
LOUDSPEAKER R
LOUDSPEAKER L
FM1
FM2
NICAM A
NICAM B
EMODULATOR
IDENT
DFP
SCART-L
SCART-R
HEADPHONE R
HEADPHONE L
D/A
A/D
DACM-R
DACM-L
LOUDSPEAKER
DACA-R
DACA-L
HEADPHONE
SC1-OUT-R
SC1-OUT-L
SCART 1
SC2-OUT-R
SC2-OUT-L
SCART 2
SCART Switching Facilities
18.432
** NO NICAM NICAM BG/I NICAM MF
7353 MSP3400 MSP3410 MSP3410
2404 470n RES 470n
ABCD
SNDL-SC1-OUTPUT
D-12
D-13

Module audio (non Dolby)

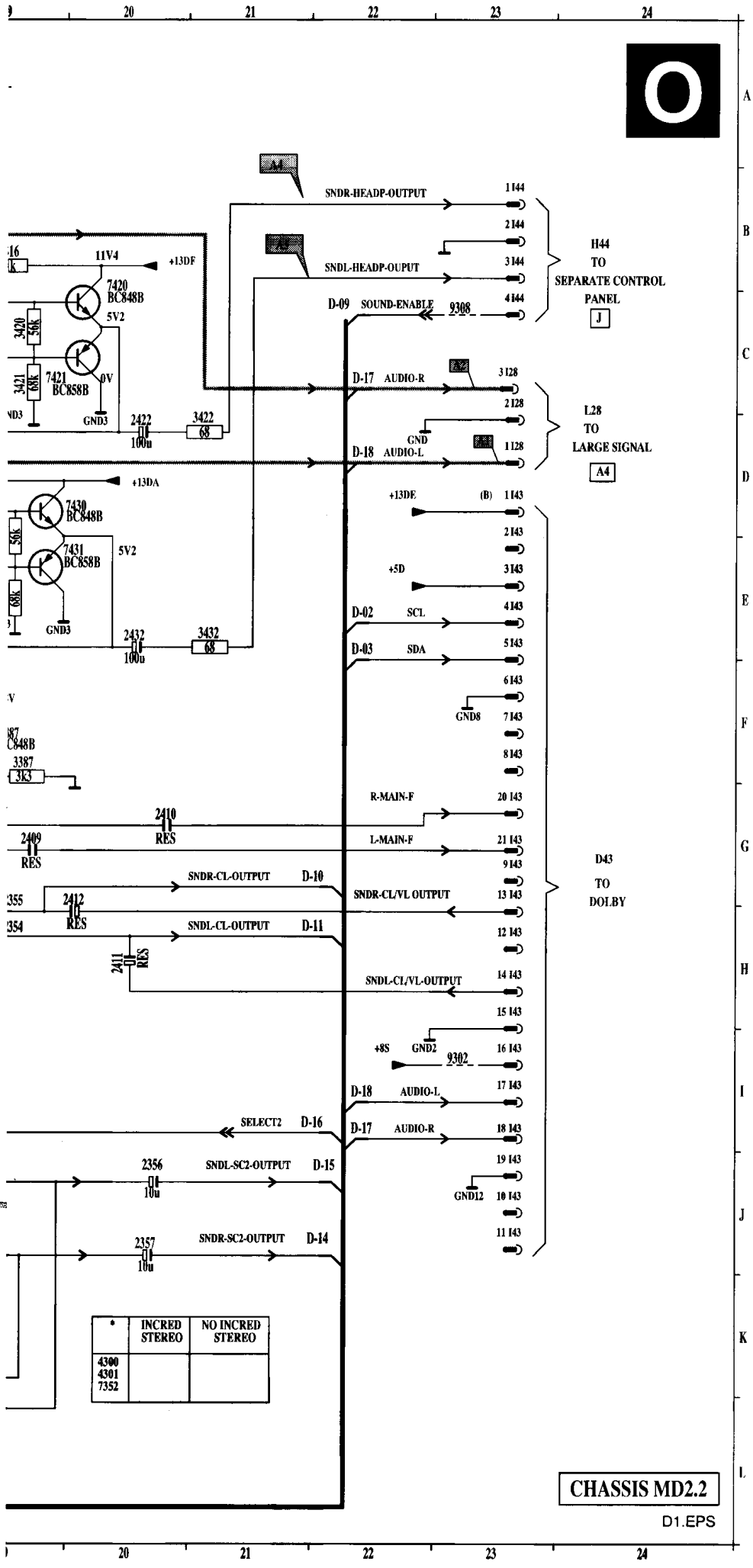

*	INCRED STEREO	NO INCRED STEREO
4300 4301 7352		

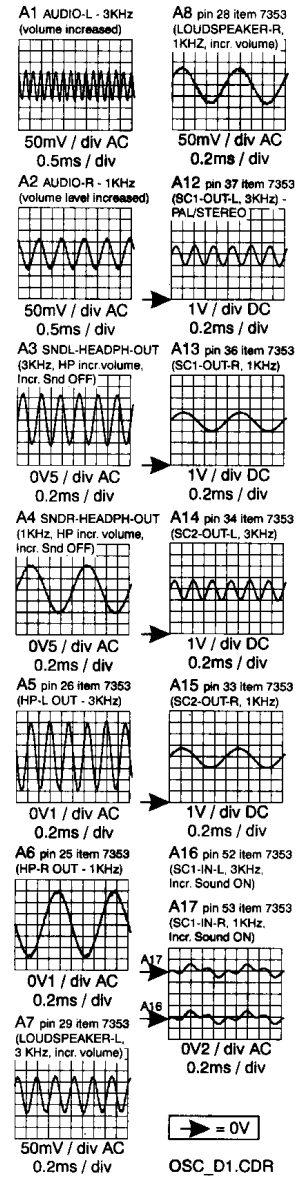

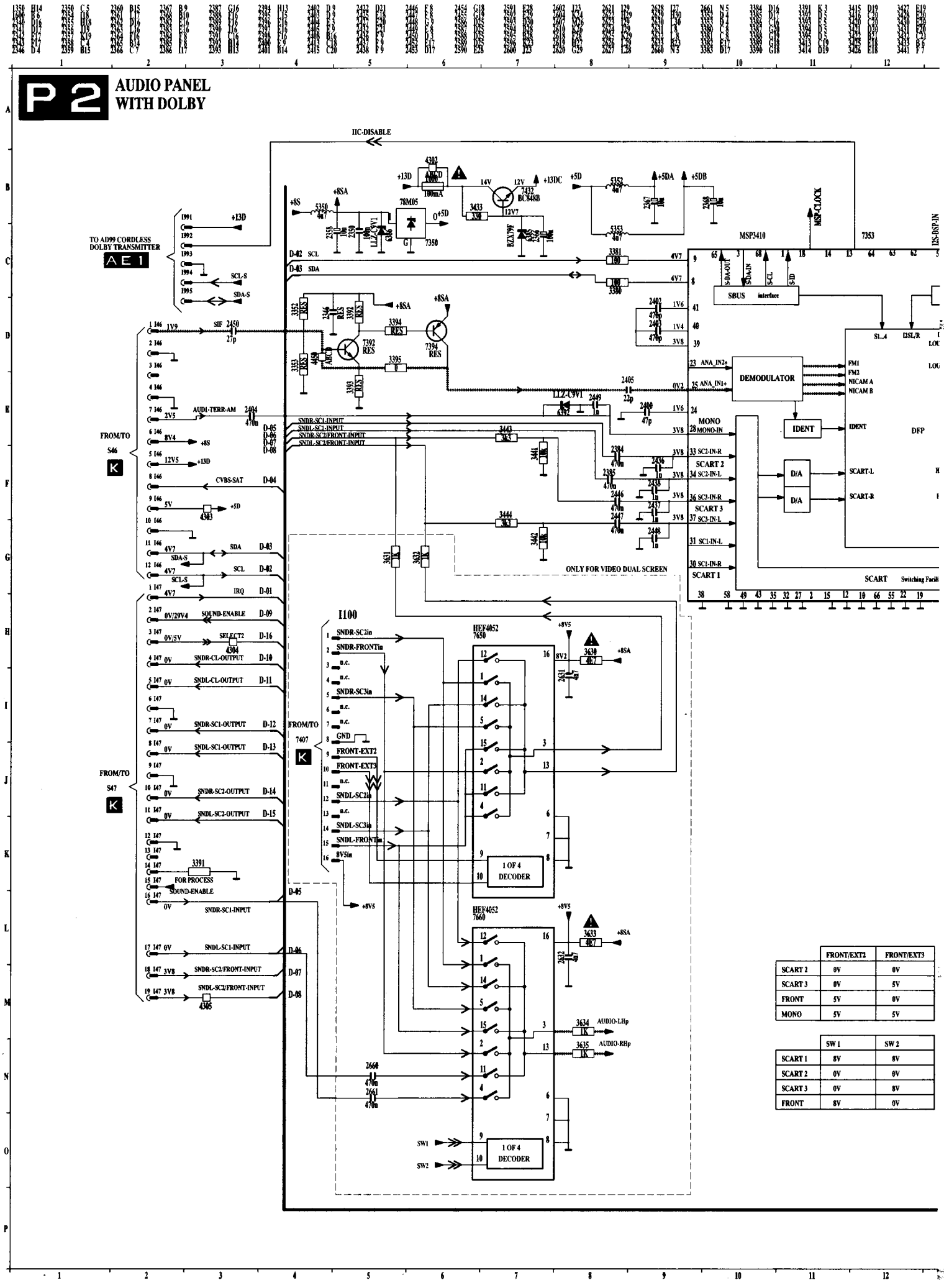

	FRONT/EXT2	FRONT/EXT3
SCART 2	0V	0V
SCART 3	0V	5V
FRONT	5V	0V
MONO	5V	5V

	SW 1	SW 2
SCART 1	8V	8V
SCART 2	0V	0V
SCART 3	0V	8V
FRONT	8V	0V

Dolby Audio Modul (mit VDS-Tonprozessor) /

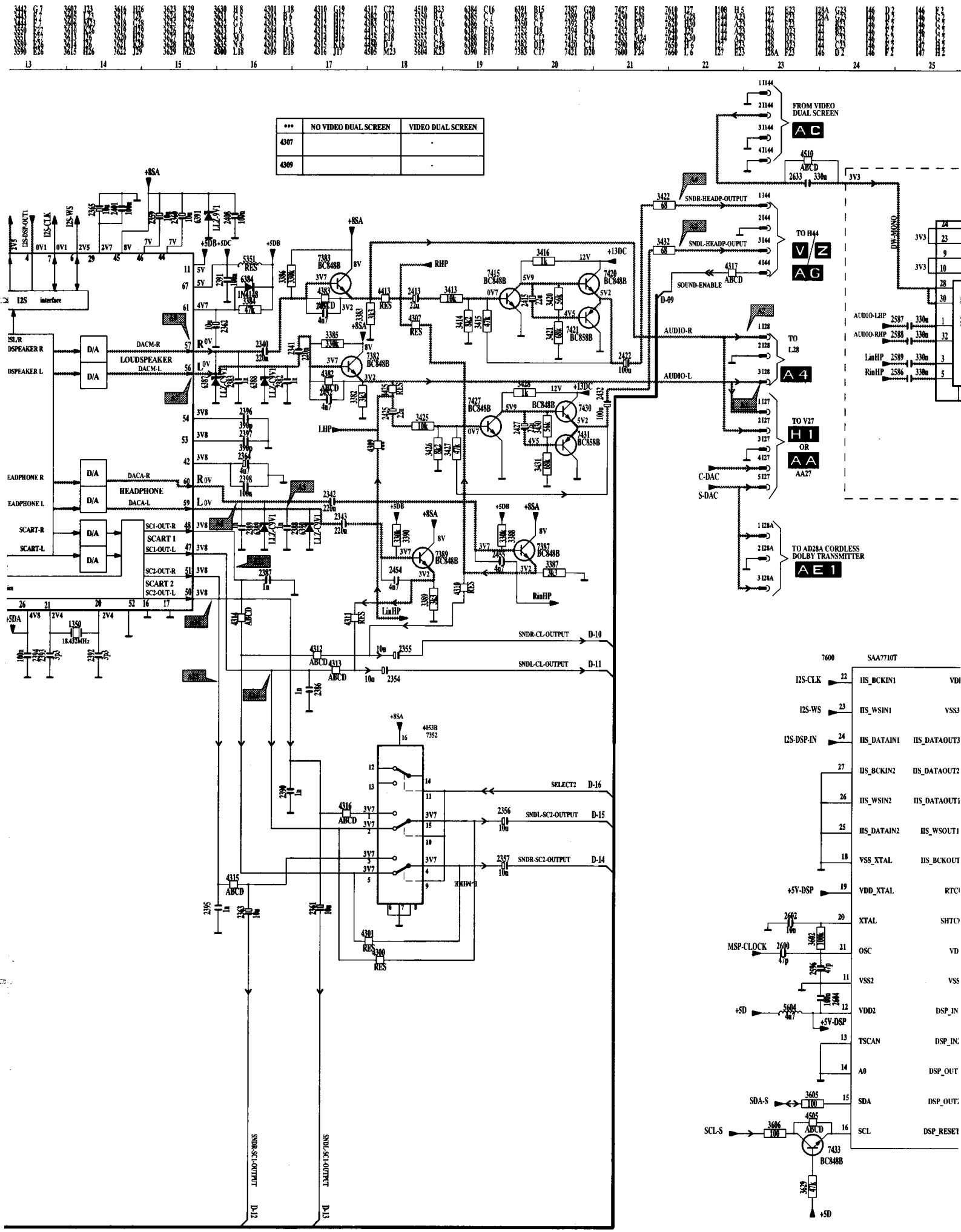

Module audio Dolby (avec traitement audio VDS)

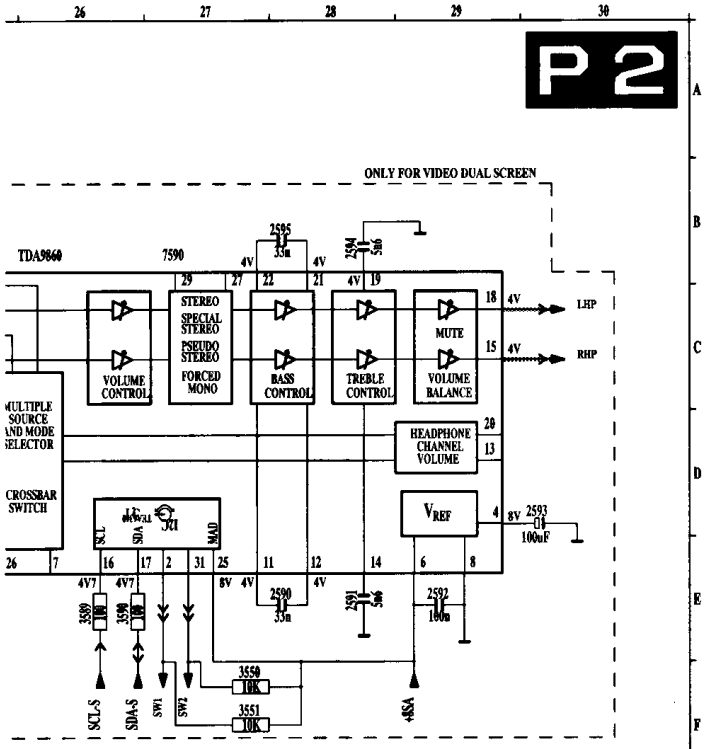

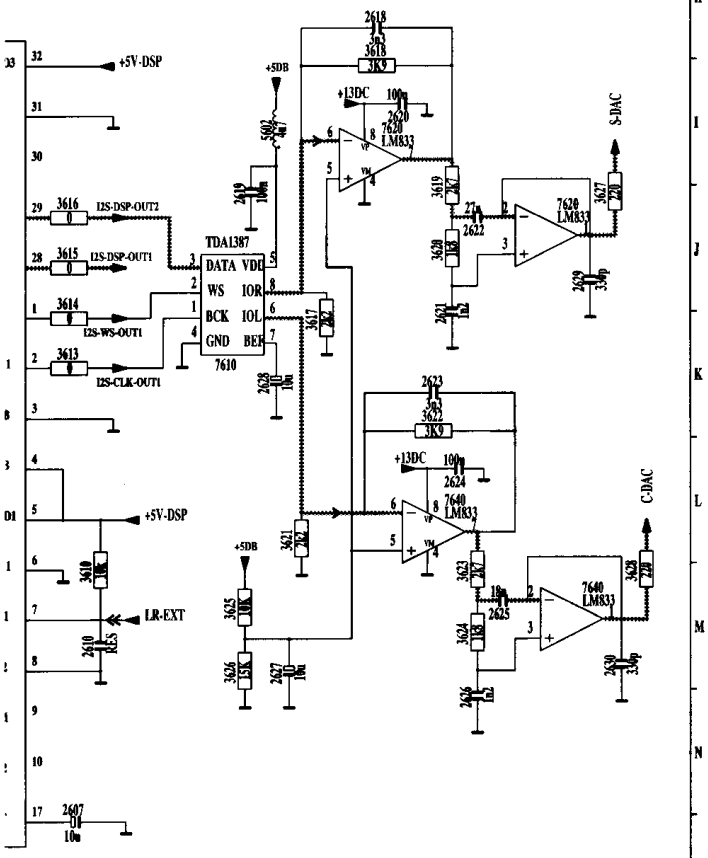

A1 AUDIO-L - 3KHz (volume increased)

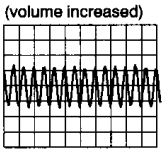

50mV / div AC
0.5ms / div

A7 pin 56 item 7353 (LOUDSPEAKER-L, 3 KHz, incr. volume)

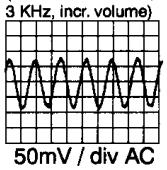

50mV / div AC
0.2ms / div

A2 AUDIO-R - 1KHz (volume level increased)

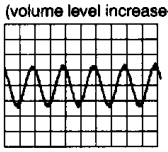

50mV / div AC
0.5ms / div

A8 pin 57 item 7353 (LOUDSPEAKER-R, 1KHZ, incr. volume)

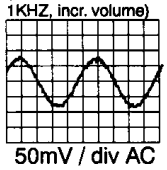

50mV / div AC
0.2ms / div

A3 SNDL-HEADPH-OUT (3KHz)

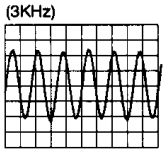

0V5 / div AC
0.2ms / div

A12 pin 48 item 7353 (SC1-OUT-L, 3KHz) - PAL/STEREO

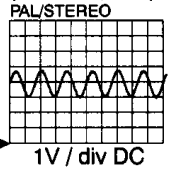

1V / div DC
0.2ms / div

A4 SNDR-HEADPH-OUT (1KHz, HP incr. volume)

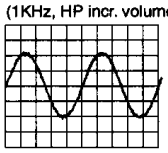

0V5 / div AC
0.2ms / div

A13 pin 47 item 7353 (SC1-OUT-R, 1KHz)

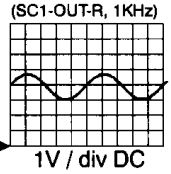

1V / div DC
0.2ms / div

A5 pin 59 item 7353 (HP-L OUT - 3KHz)

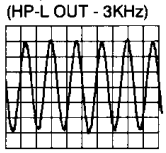

0V1 / div AC
0.2ms / div

A14 pin 50 item 7353 (SC2-OUT-L, 3KHz)

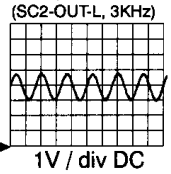

1V / div DC
0.2ms / div

A6 pin 60 item 7353 (HP-R OUT - 1KHz)

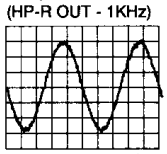

0V1 / div AC
0.2ms / div

A15 pin 51 item 7353 (SC2-OUT-R, 1KHz)

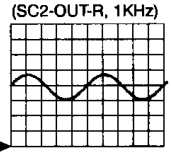

1V / div DC
0.2ms / div

→ = 0V

OSC_P2.CDR
260297

COMB filter module / Kammfilter-Modul / Module filtre en peigne

2400 A 4	2405 D 5	2414 A 2	3402 G 2	4404 G 5	5400 A 4	6401 B 3	9408 A 4	O55 G 1
2401 D 2	2406 B 5	2415 A 4	3421 D 3	4405 C 4	5401 D 2	7400 D 3	O55 E 1	O55 C 1
2402 D 2	2407 G 3	2416 D 2	3422 B 4	4407 G 3	5402 C 2	9403 G 6	O55 F 1	O55 G 7
2403 F 4	2412 F 2	2417 D 2	3423 G 4	4408 G 2	5403 B 2	9406 E 1	O55 C 1	O55 F 7
2404 D 4	2413 B 5	3401 B 3	4401 F 3	4411 F 4	5405 F 6	9407 F 2	O55 A 1	O55 B 1

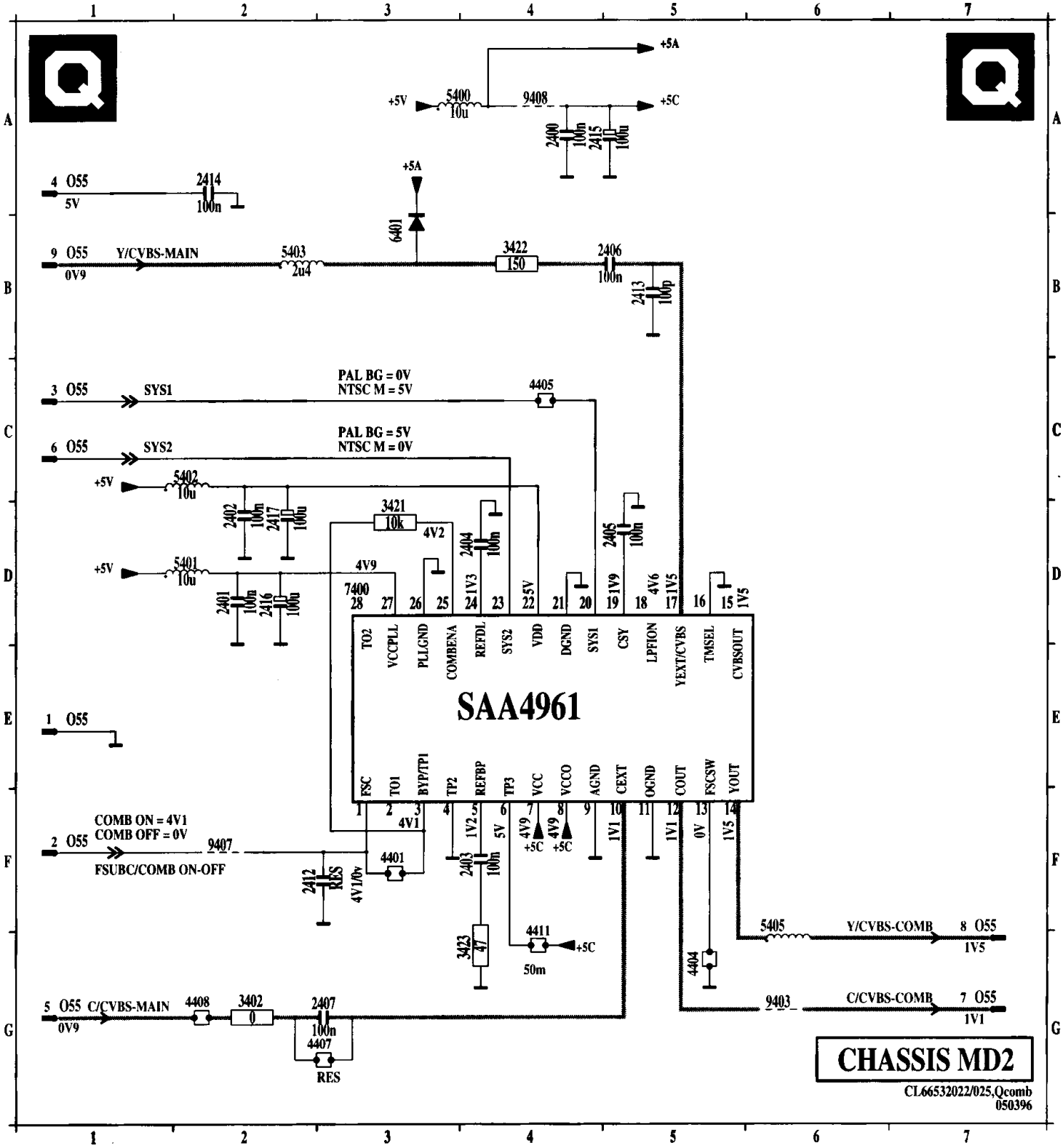

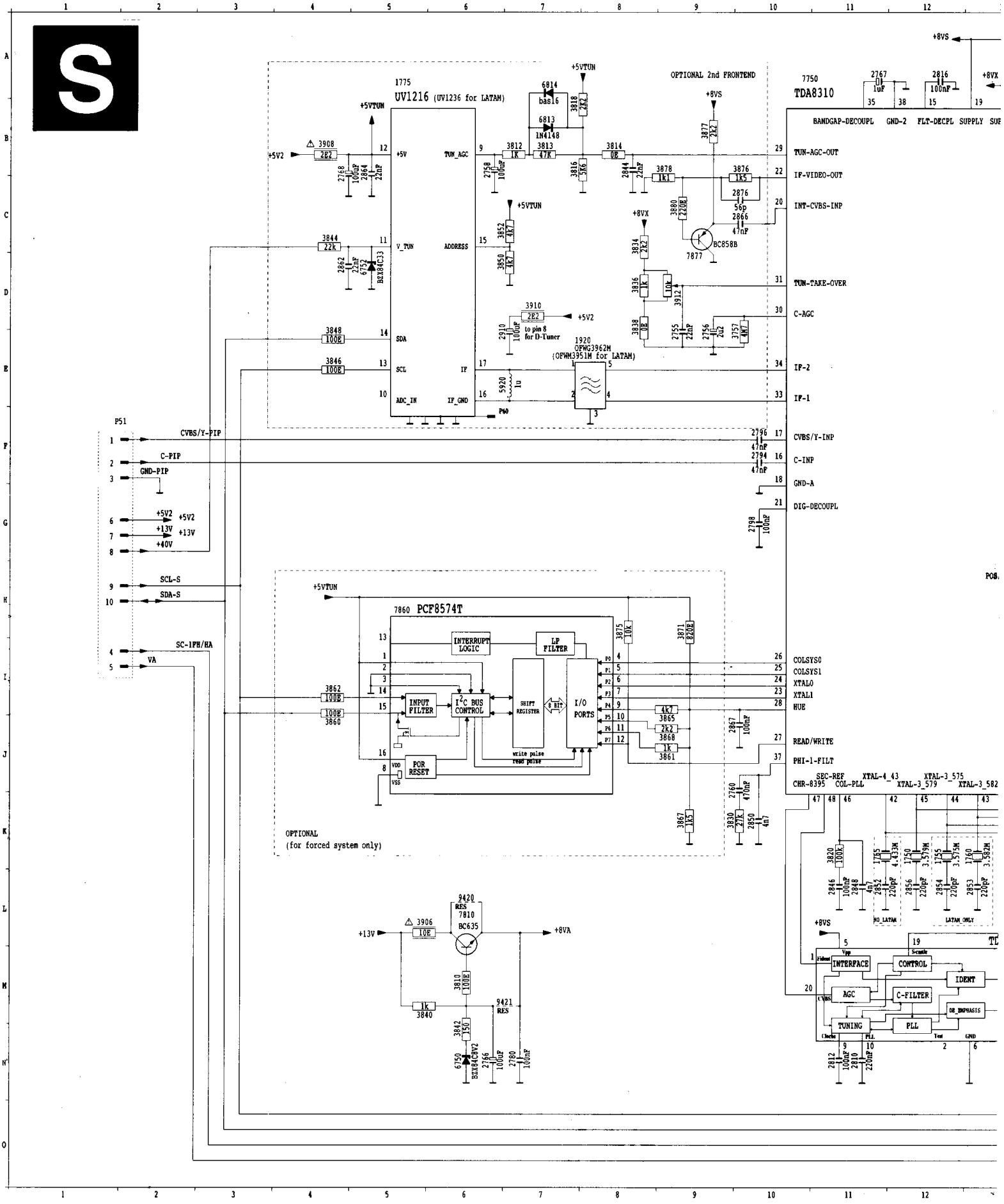
S
1775
UV1216 (UV1236 for LATAM)
OPTIONAL 2nd FRONTEND
7750
TDA8310
BANDGAP-DECOUPL
GND-2
FLT-DECPL
SUPPLY
TUN-AGC-OUT
IF-VIDEO-OUT
INT-CVBS-INP
TUN-TAKE-OVER
C-AGC
IF-2
IF-1
CVBS/Y-INP
C-INP
GND-A
DIG-DECOUPL
P51
CVBS/Y-PIP
C-PIP
GND-PIP
SCL-S
SDA-S
SC-1PH/HA
VA
7860 PCF8574T
INTERRUPT LOGIC
LP FILTER
INPUT FILTER
I2C BUS CONTROL
SHIFT REGISTER
I/O PORTS
POR RESET
COLSYS0
COLSYS1
XTAL0
XTAL1
HUE
READ/WRITE
PHI-1-FILT
OPTIONAL
(for forced system only)
9420
7810
BC635
9421
INTERFACE
CONTROL
IDENT
AGC
C-FILTER
TUNING
PLL

PIP2-Modul

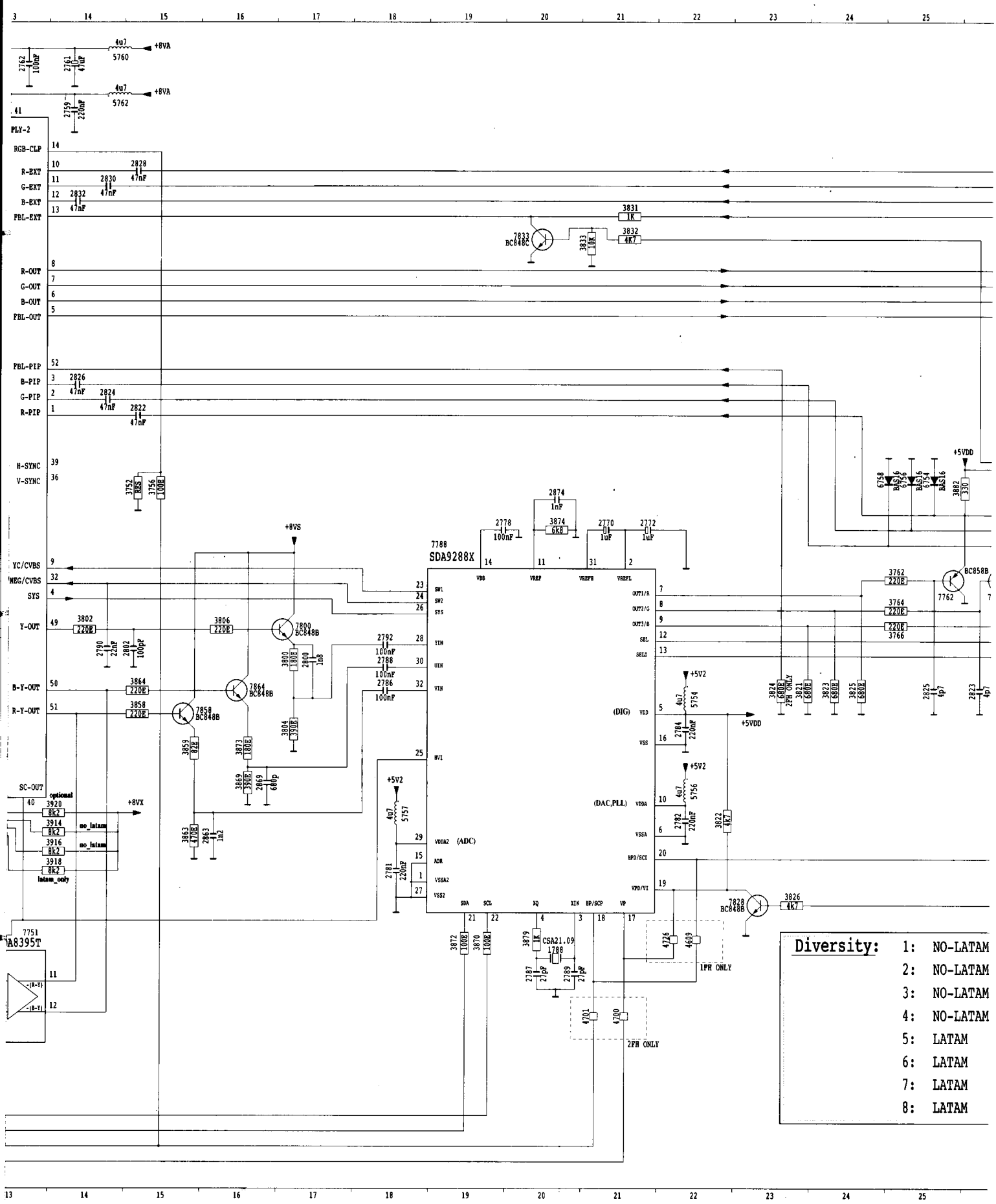

PLY-2
RGB-CLP
R-EXT
G-EXT
B-EXT
FBL-EXT
R-OUT
G-OUT
B-OUT
FBL-OUT
FBL-PIP
B-PIP
G-PIP
R-PIP
H-SYNC
V-SYNC
YC/CVBS
NEG/CVBS
SYS
Y-OUT
B-Y-OUT
R-Y-OUT
SC-OUT
+8VA
+8VS
+8VX
+5VDD
+5V2
7788
SDA9288X
(DIG)
(DAC,PLL)
(ADC)
7751
A8395T
optional
no_latam
latam_only
1FH ONLY
2FH ONLY
Diversity:
1: NO-LATAM
2: NO-LATAM
3: NO-LATAM
4: NO-LATAM
5: LATAM
6: LATAM
7: LATAM
8: LATAM

Module PIP2

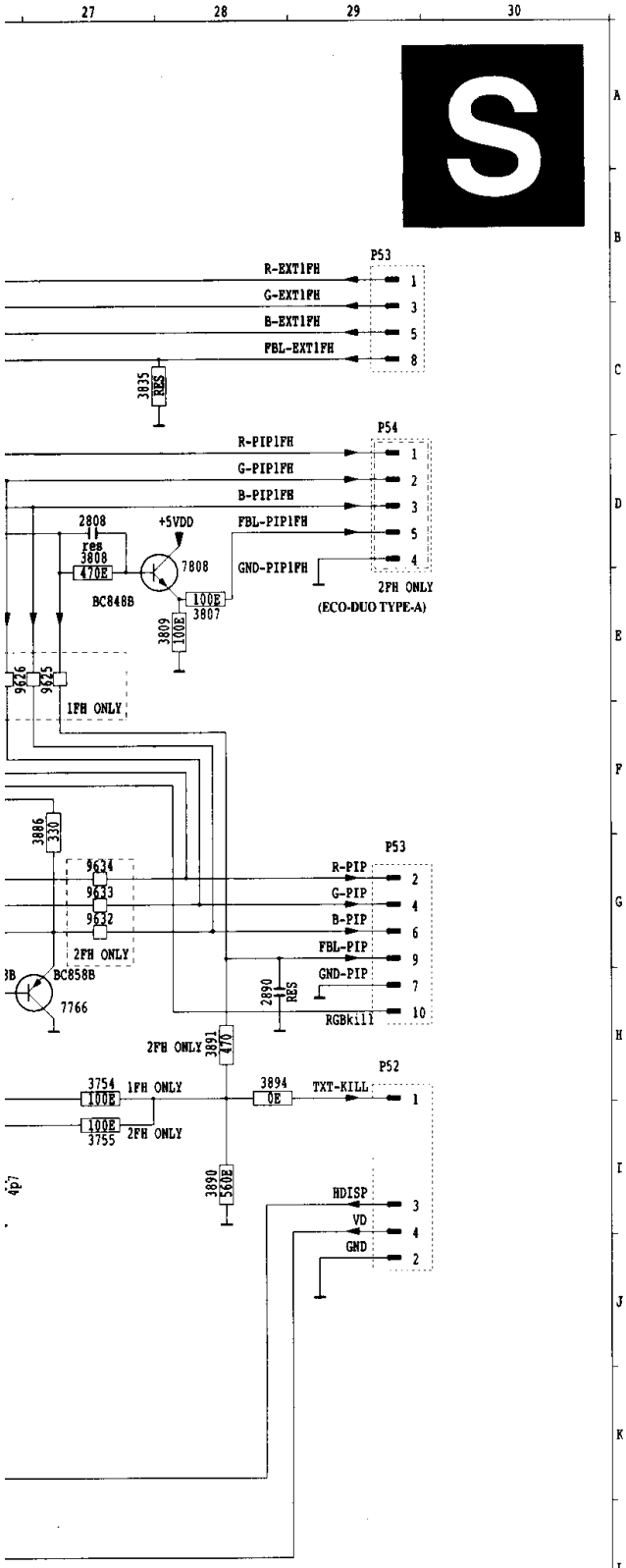

-FRONTEND / 1FH
-FRONTEND / 2FH
FRONTEND / 1FH
FRONTEND / 2FH
-FRONTEND / 1FH
-FRONTEND / 2FH
FRONTEND / 1FH
FRONTEND / 2FH

PIP interface panel / PIP-Schnittstellenplatine / Platine interface PIP (image incrustée)

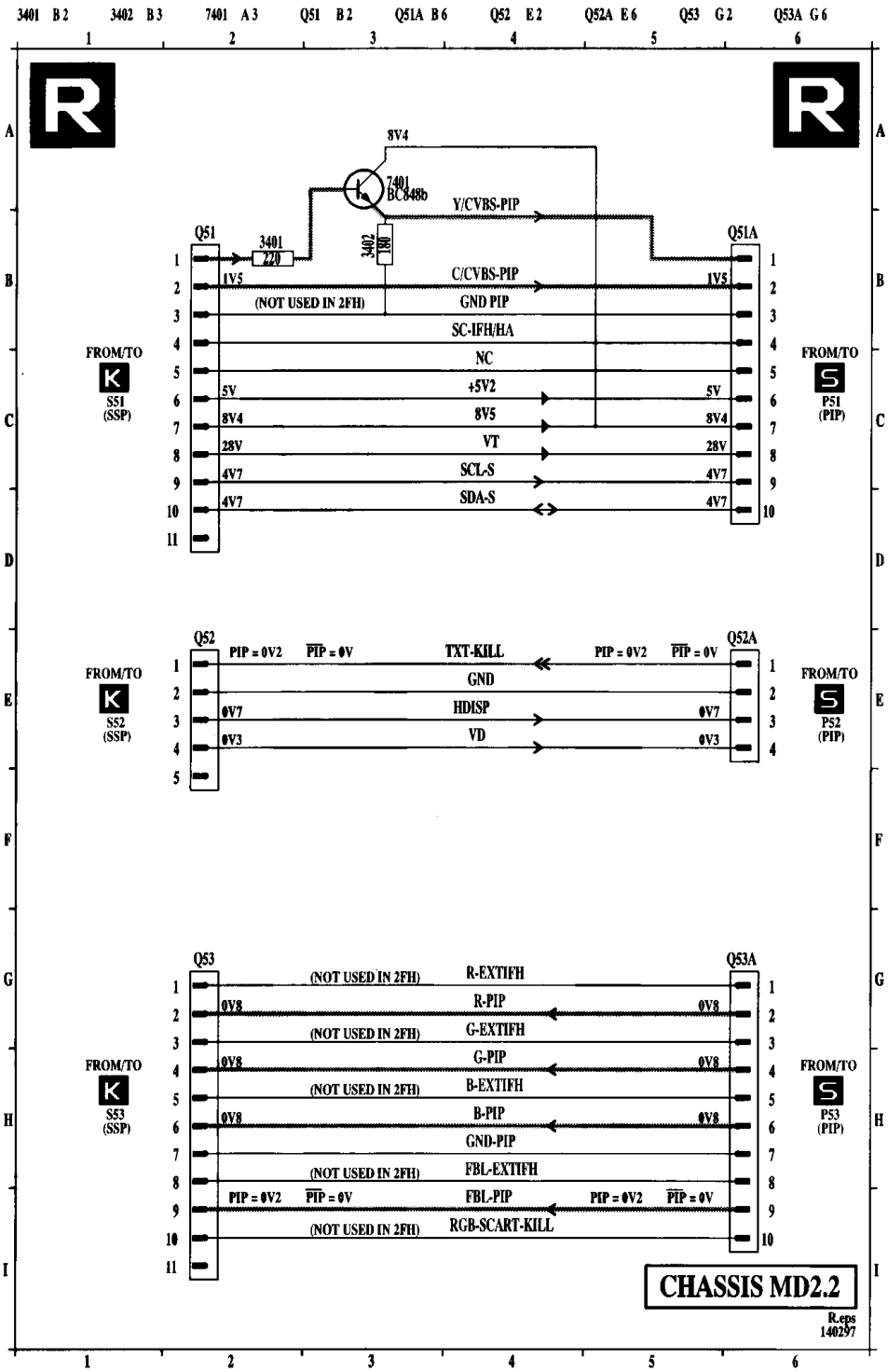

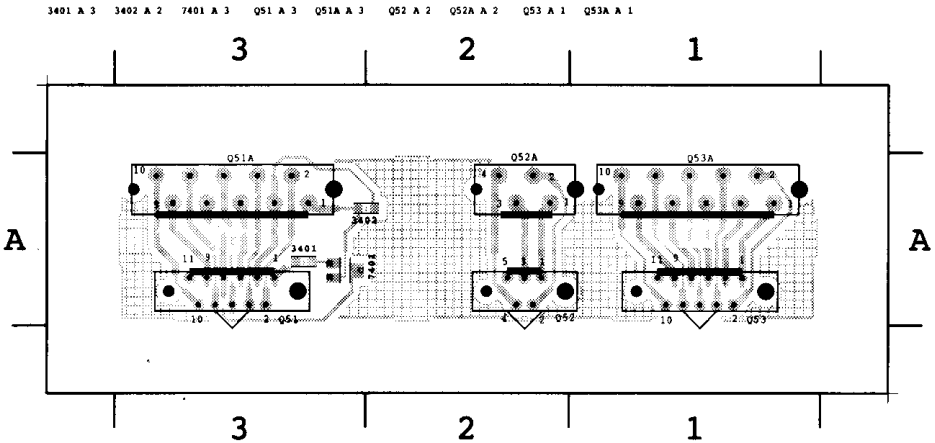

Mains input & RC5 panel (top control middle styling) / Netzeingang- & RC5-Platine (Bedienung mitte oben) / Platine entrée secteur & RC5 (style commande sur le haut, millieu)

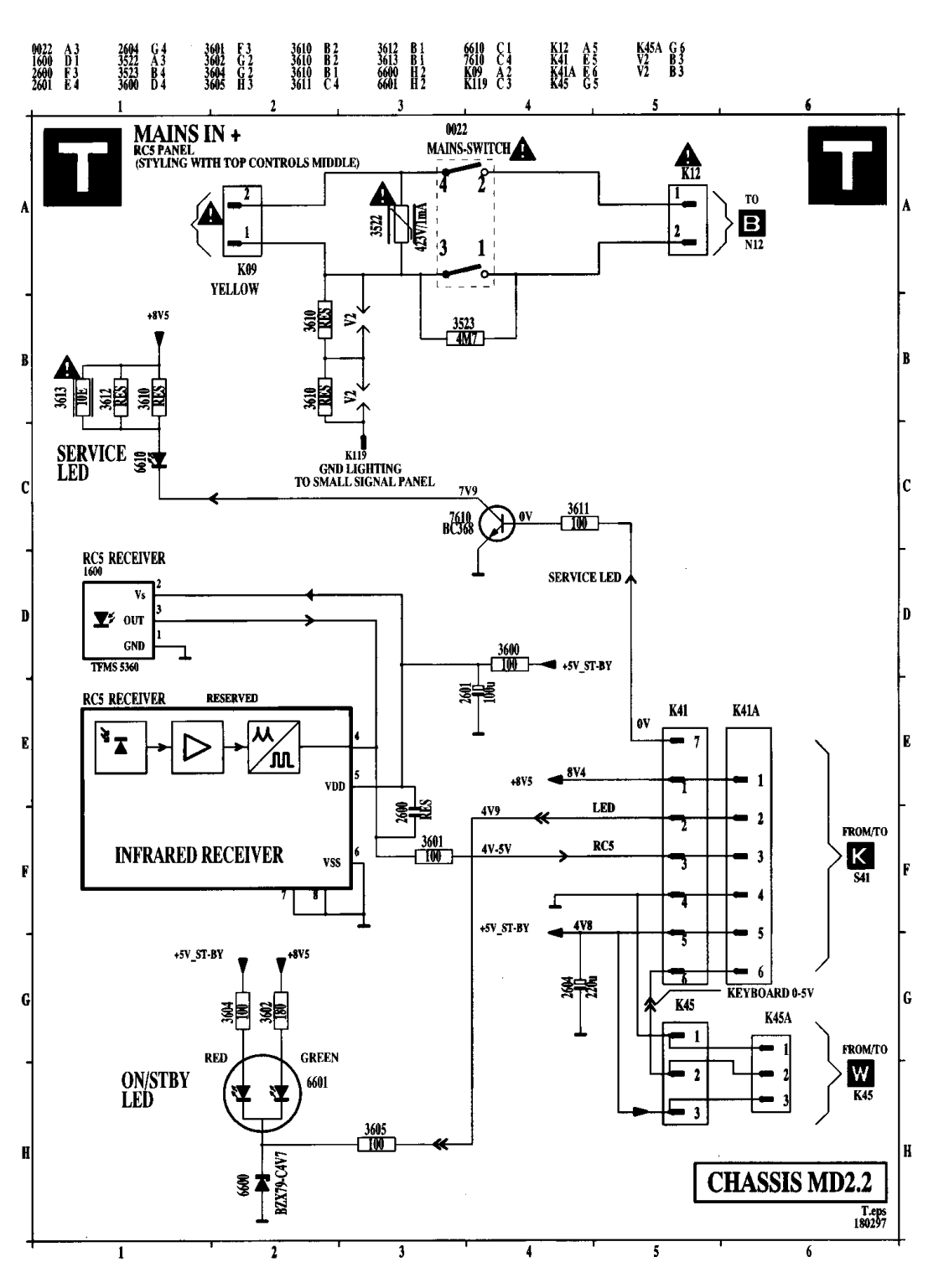

Mains input & RC5 panel (top control right styling) / Netzeingang- & RC5-Platine (Bedienung rechts oben) / Platine entrée secteur & RC5 (style commande sur le haut, droite)

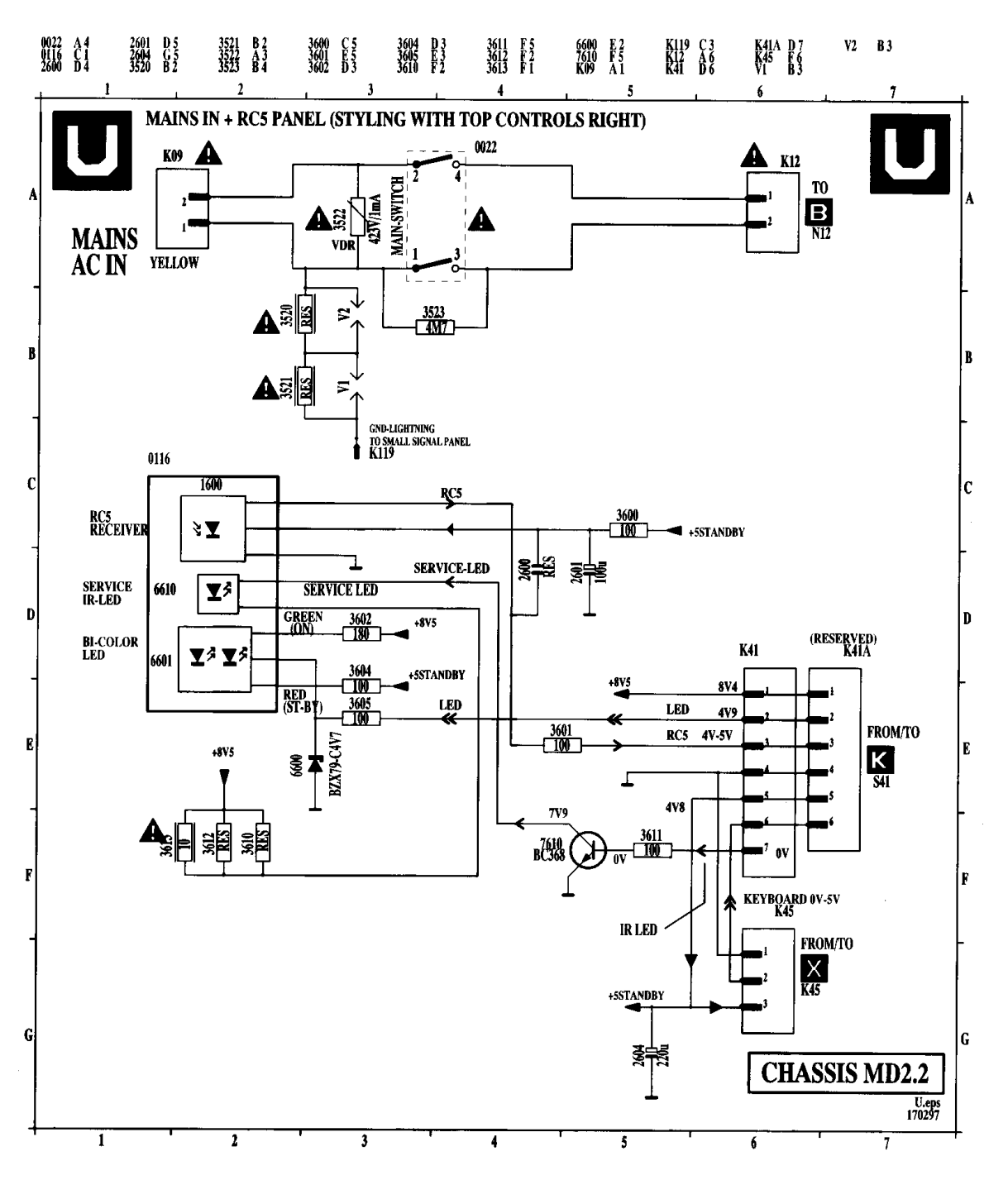

Front input/output panel (top control styling) / Front-Ein-/Ausgangsplatine (Bedienung oben) / Platine frontale entrée/sortie (style commande sur le haut)

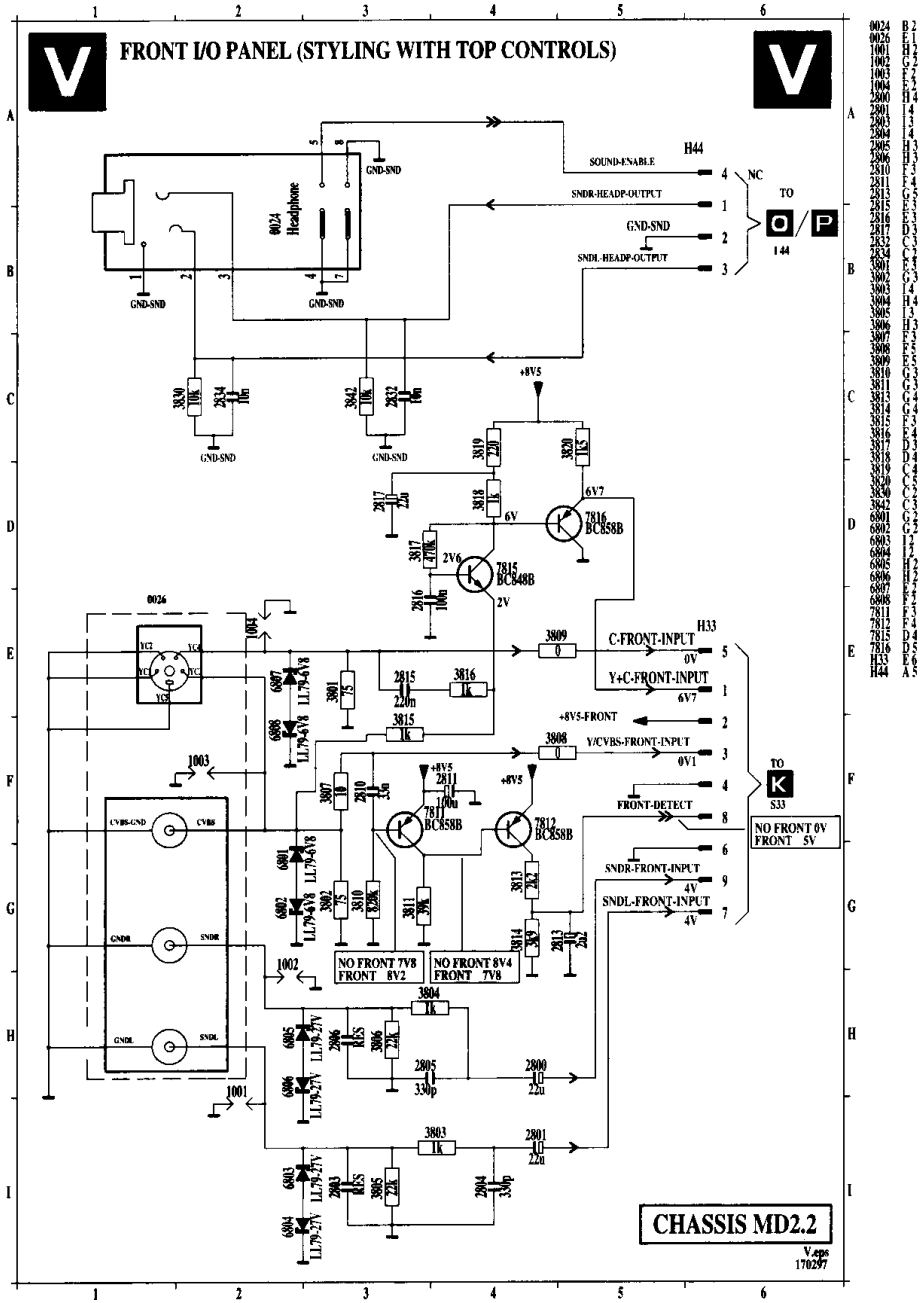

Top control panel / Obere bedienungsplatine / Platine supérieure de commande

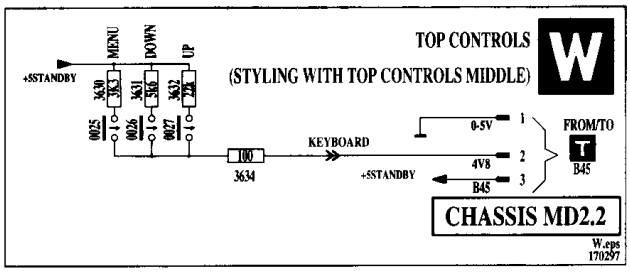

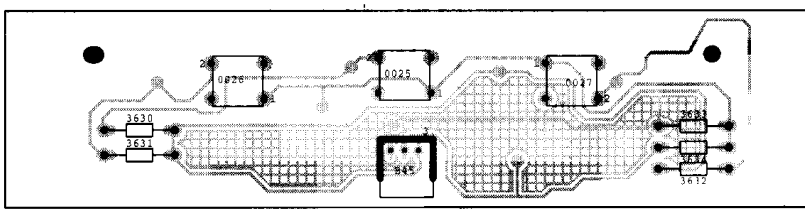

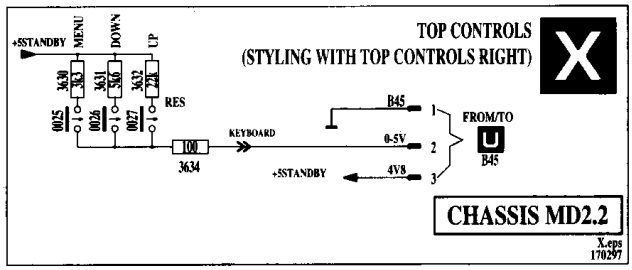

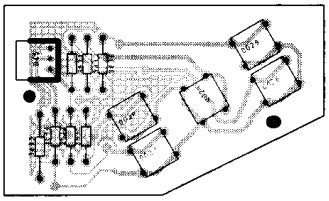

Mains input panel (classic line styling) / Netzeingangsplatine (herkömmliche Bedienung) / Platine entrée secteur (style ligne classique)

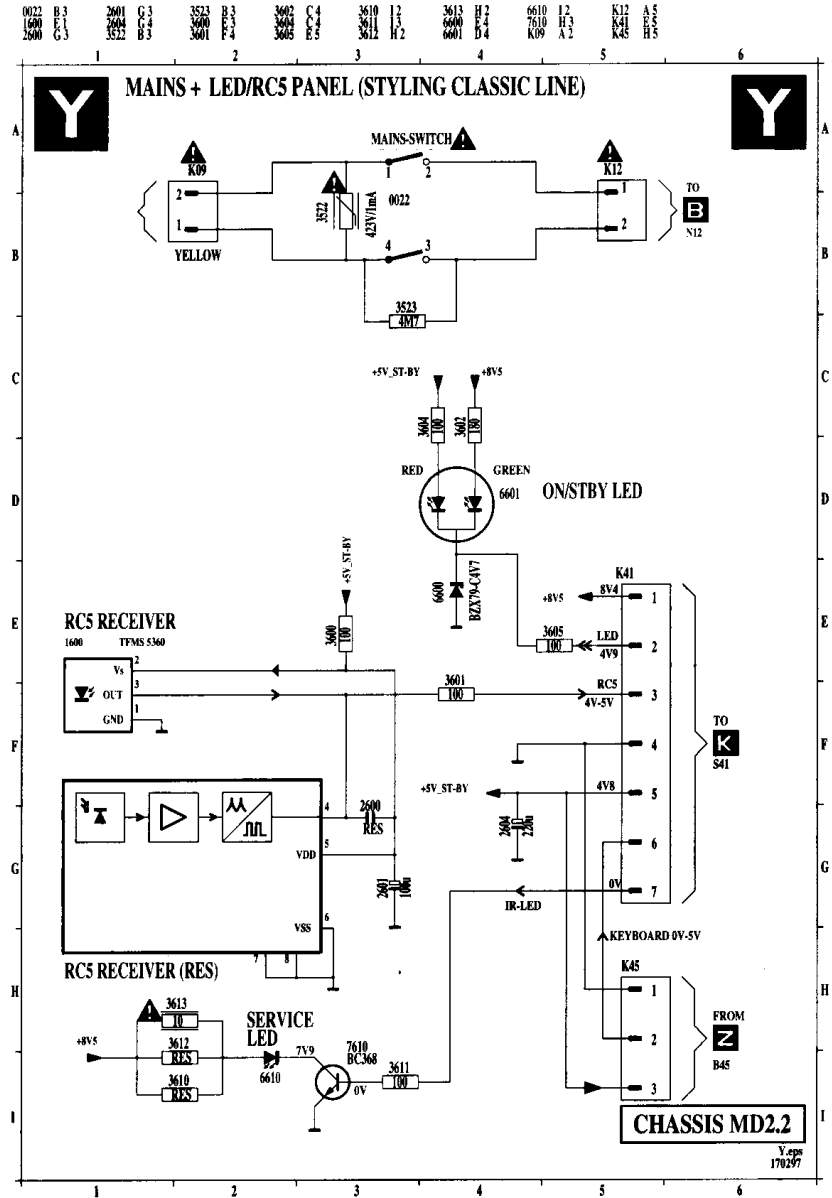

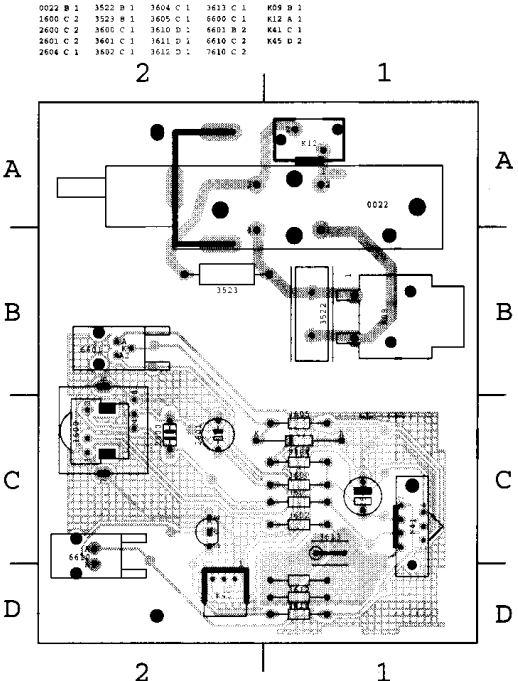

Control board (classic line styling) / Steuerplatine (herkömmliche Bedienung) / Tableau de commande (style ligne classique)

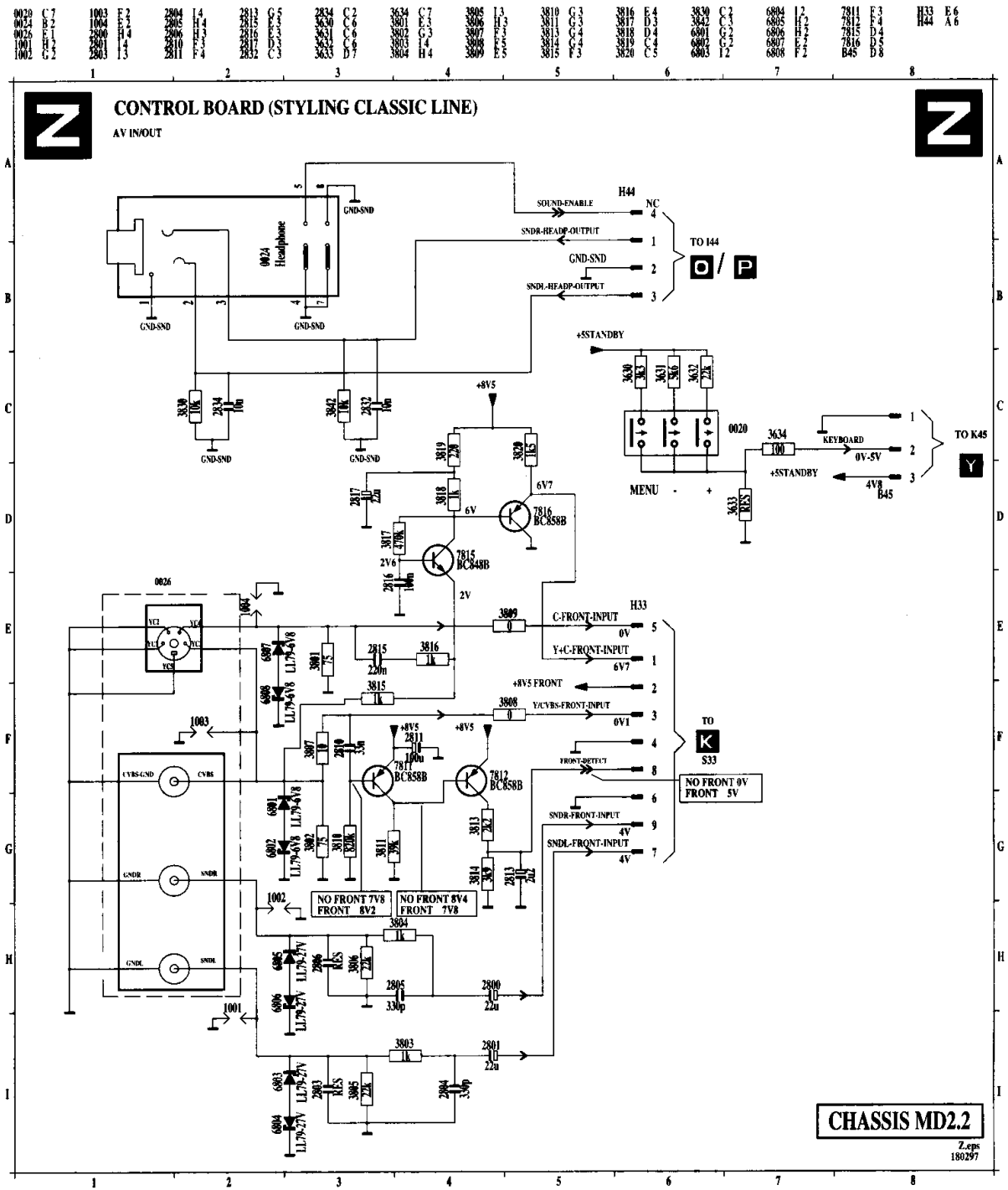

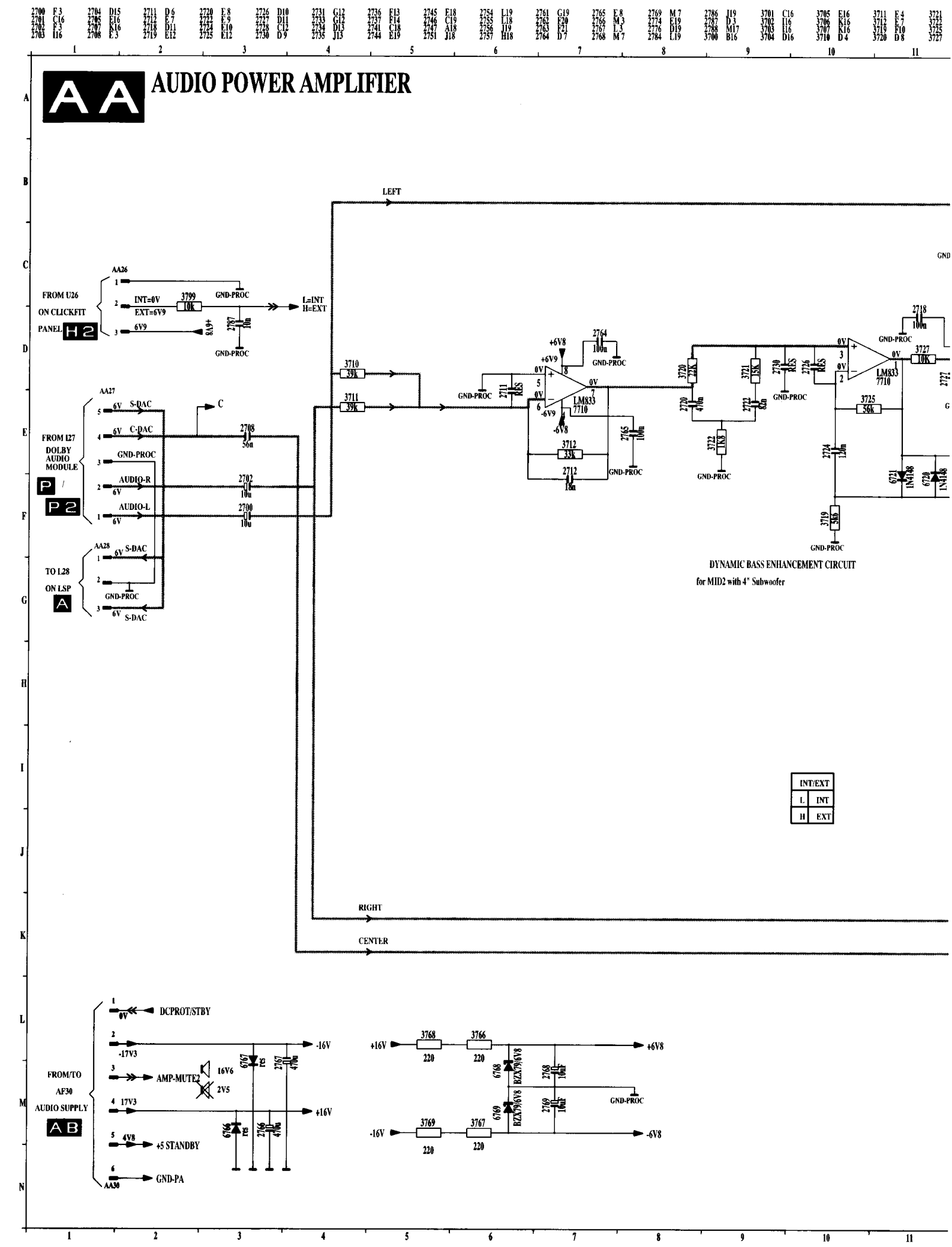
AA
AUDIO POWER AMPLIFIER
LEFT
RIGHT
CENTER
FROM U26
ON CLICKFIT
PANEL H2
INT=0V
EXT=6V9
L=INT
H=EXT
FROM I27
DOLBY
AUDIO
MODULE
P / P2
S-DAC
C-DAC
GND-PROC
AUDIO-R
AUDIO-L
TO L28
ON LSP
A
LM833
7710
DYNAMIC BASS ENHANCEMENT CIRCUIT
for MID2 with 4" Subwoofer
INT/EXT
L INT
H EXT
DCPROT/STBY
FROM/TO
AF30
AUDIO SUPPLY
AB
AMP-MUTE2
+5 STANDBY
GND-PA
-16V
+16V
+6V8
-6V8

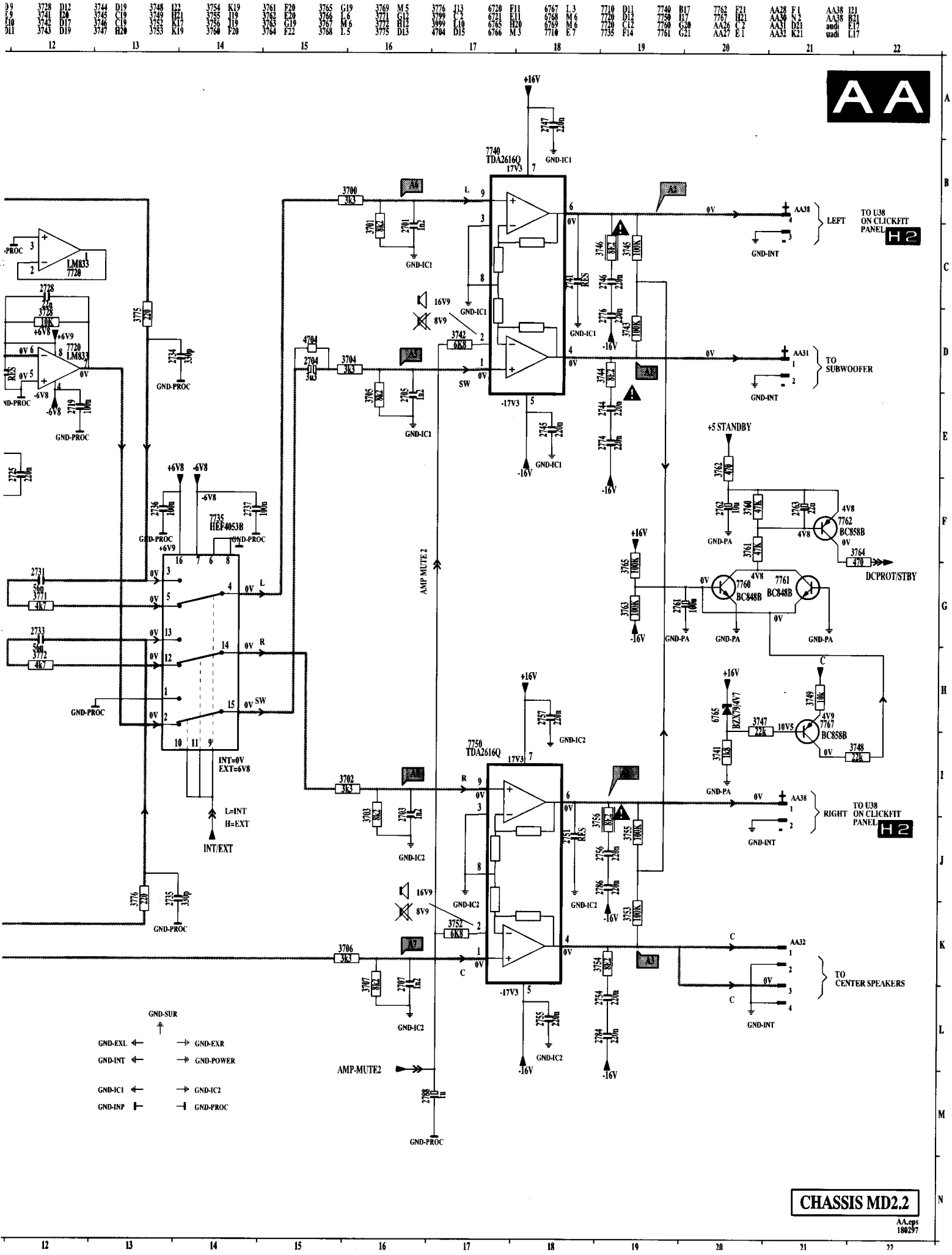
AA
7740
TDA2616Q
7750
TDA2616Q
LM833
7720
7735
HEF4053B
INT=0V
EXT=6V8
L=INT
H=EXT
INT/EXT
AMP MUTE 2
AMP-MUTE2
LEFT
TO U38 ON CLICKFIT PANEL
H2
TO SUBWOOFER
+5 STANDBY
DCPROT/STBY
RIGHT
TO CENTER SPEAKERS
GND-SUR
GND-EXL
GND-EXR
GND-INT
GND-POWER
GND-IC1
GND-IC2
GND-INP
GND-PROC
CHASSIS MD2.2
AA.eps
180297

1300	C 2	2306	F13	2312	G 9	2318	D 5	2325	E11	3303	E 3	3309	F13	3315	G13	3321	D11	3329	E 4	3336	F 4	3342	F10	334
2301	C 5	2307	C 9	2313	F 1	2319	D 9	2326	E13	3304	E 1	3310	C11	3316	E 9	3322	D12	3331	E 9	3337	F 5	3343	F 5	334
2302	E 1	2308	C 4	2314	F12	2320	D 9	2327	E 6	3305	F 7	3311	D11	3317	F 9	3323	F 9	3332	F 1	3338	D13	3344	F 1	339
2303	F 6	2309	C 4	2315	G13	2321	G12	3300	C 2	3306	D 4	3312	D11	3318	F12	3325	G12	3333	C14	3339	F10	3345	D 6	530
2304	E 5	2310	E 9	2316	C 6	2322	F11	3301	D 2	3307	G 2	3313	C10	3319	F14	3326	D12	3334	E15	3340	F10	3346	E 7	530
2305	D 7	2311	E10	2317	G10	2323	F 8	3302	D 2	3308	F12	3314	D10	3320	G14	3327	D 4	3335	D14	3341	G12	3347	D 6	530

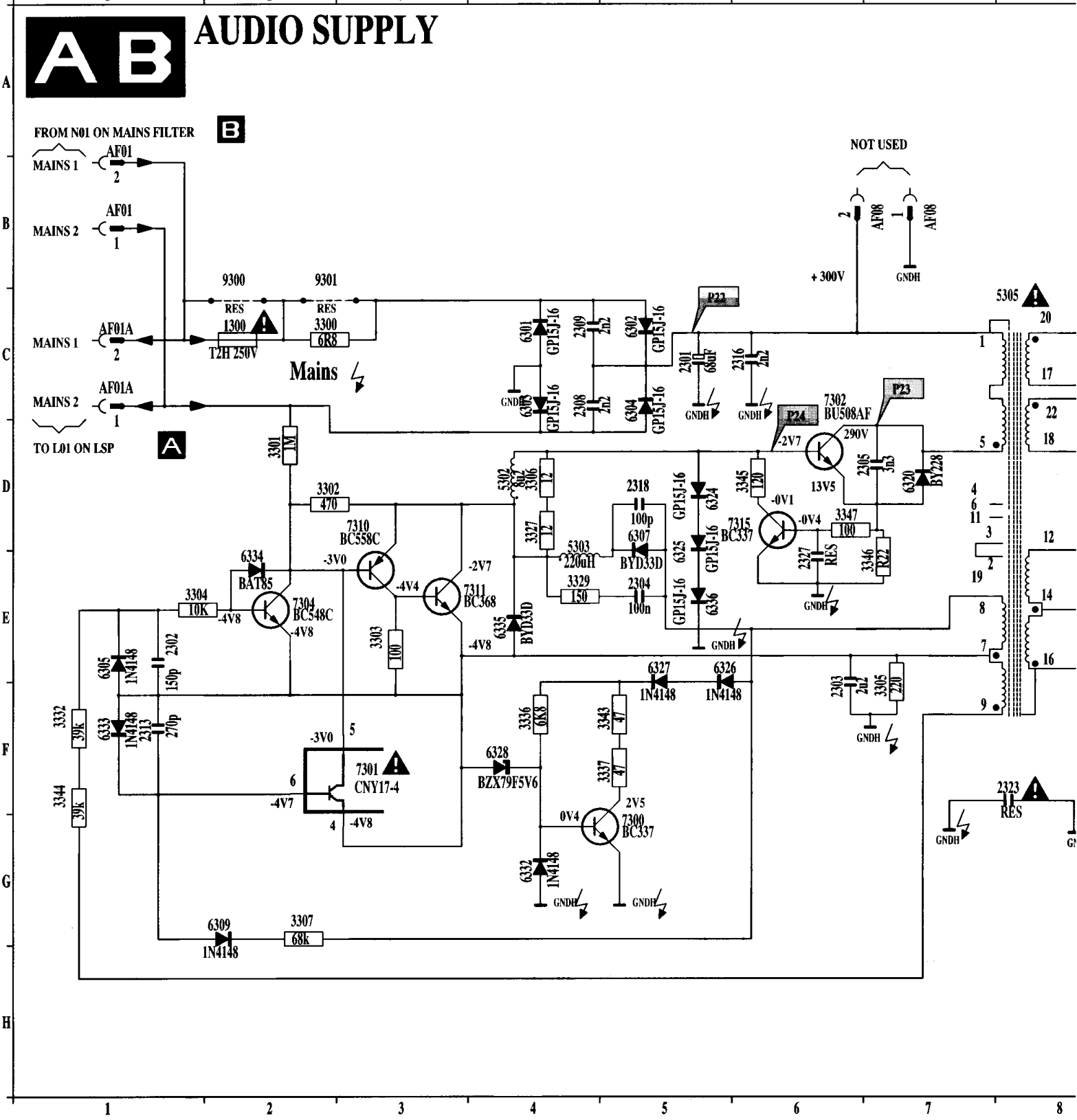

Platine alimentation audio

8	D12	5319	F14	6302	C5	6309	G2	6315	F8	6321	F9	6327	E5	6333	F1	7301	F3	7306	F11	9300	B2	AF06	E15
9	C9	5320	G14	6303	C4	6310	C9	6316	D14	6322	E9	6328	F4	6334	E2	7301	E10	7310	D3	9301	B2	AF08	B7
8	H8	5333	C14	6304	C5	6311	D10	6317	G11	6323	F11	6329	C10	6335	E4	7302	C6	7311	E3	AF01	B1	AF08	B7
2	D4	5334	E15	6305	E1	6312	D9	6318	D11	6324	D5	6330	E13	6336	E5	7303	D11	7312	G12	AF01	A1	AF30	C15
3	E4	5335	D14	6307	D5	6313	E9	6319	G10	6325	D5	6331	F12	6337	E9	7304	E2	7314	E12	AF01A	C1	k1	B8
5	C8	6301	C4	6308	F11	6314	E9	6320	D7	6326	E5	6332	G4	7300	G5	7305	F10	7315	D6	AF01A	C1	k3	B7

9 10 11 12 13 14 15

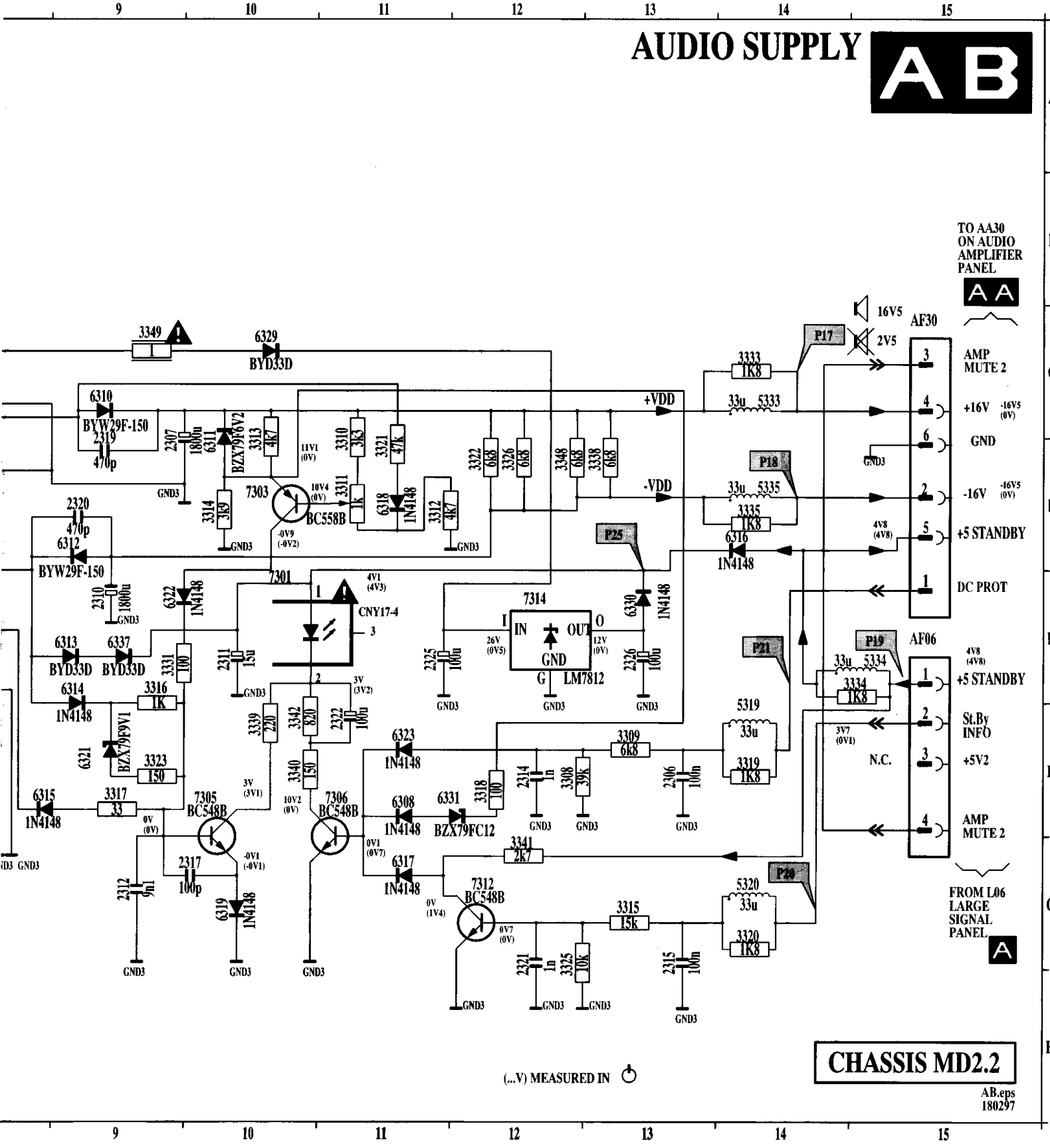

9 10 11 12 13 14 15

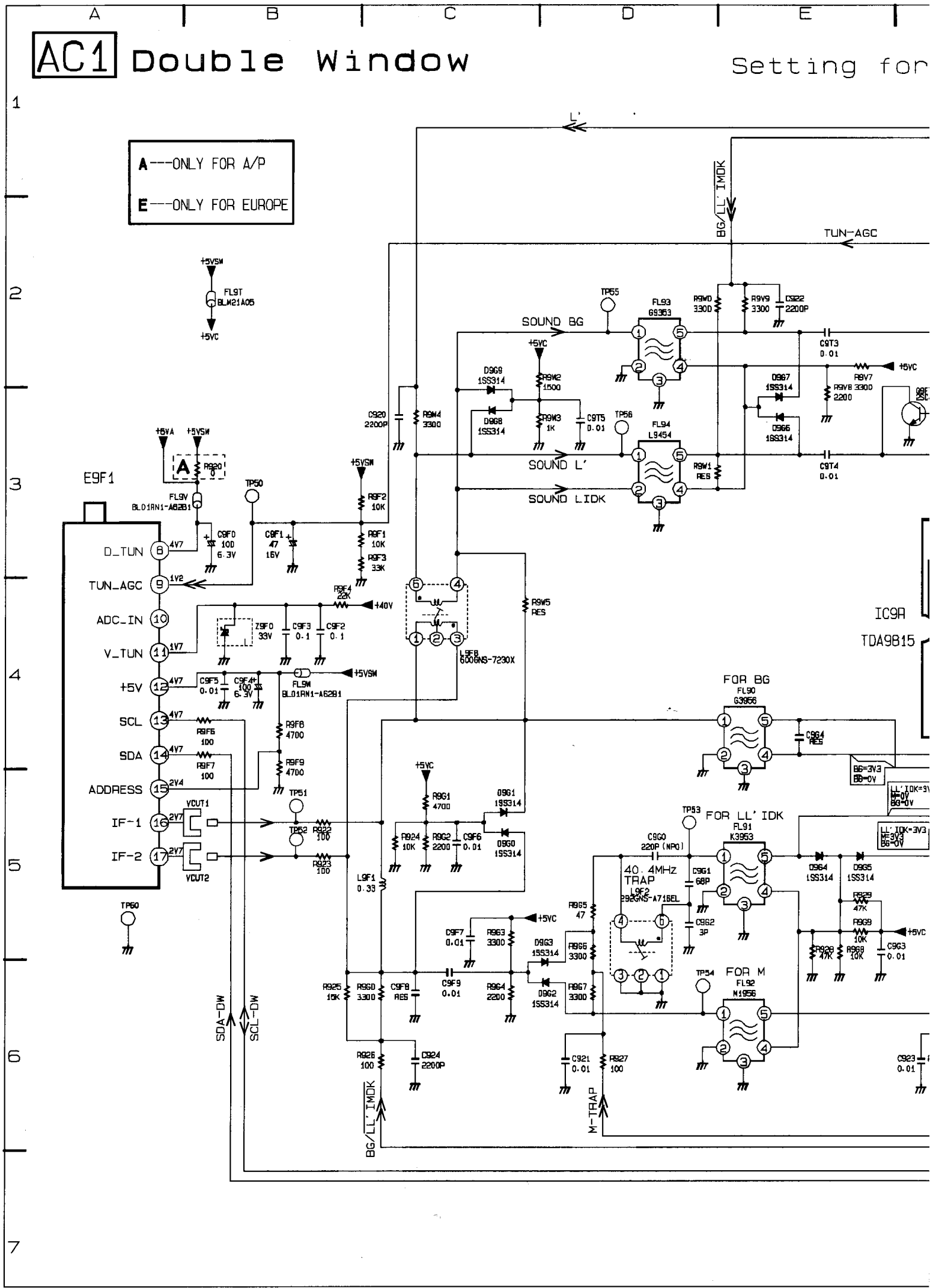
AC1 Double Window
Setting for
A---ONLY FOR A/P
E---ONLY FOR EUROPE
E9F1
D_TUN
TUN_AGC
ADC_IN
V_TUN
+5V
SCL
SDA
ADDRESS
IF-1
IF-2
SOUND BG
SOUND L'
SOUND LIDK
TUN-AGC
BG/LL'IMDK
IC9A
TDA9B15
FOR BG
FOR LL' IDK
FOR M
40.4MHz TRAP
SDA-DW
SCL-DW
M-TRAP

F G H I J

measurments:SDM+VDS picture mode

AC1

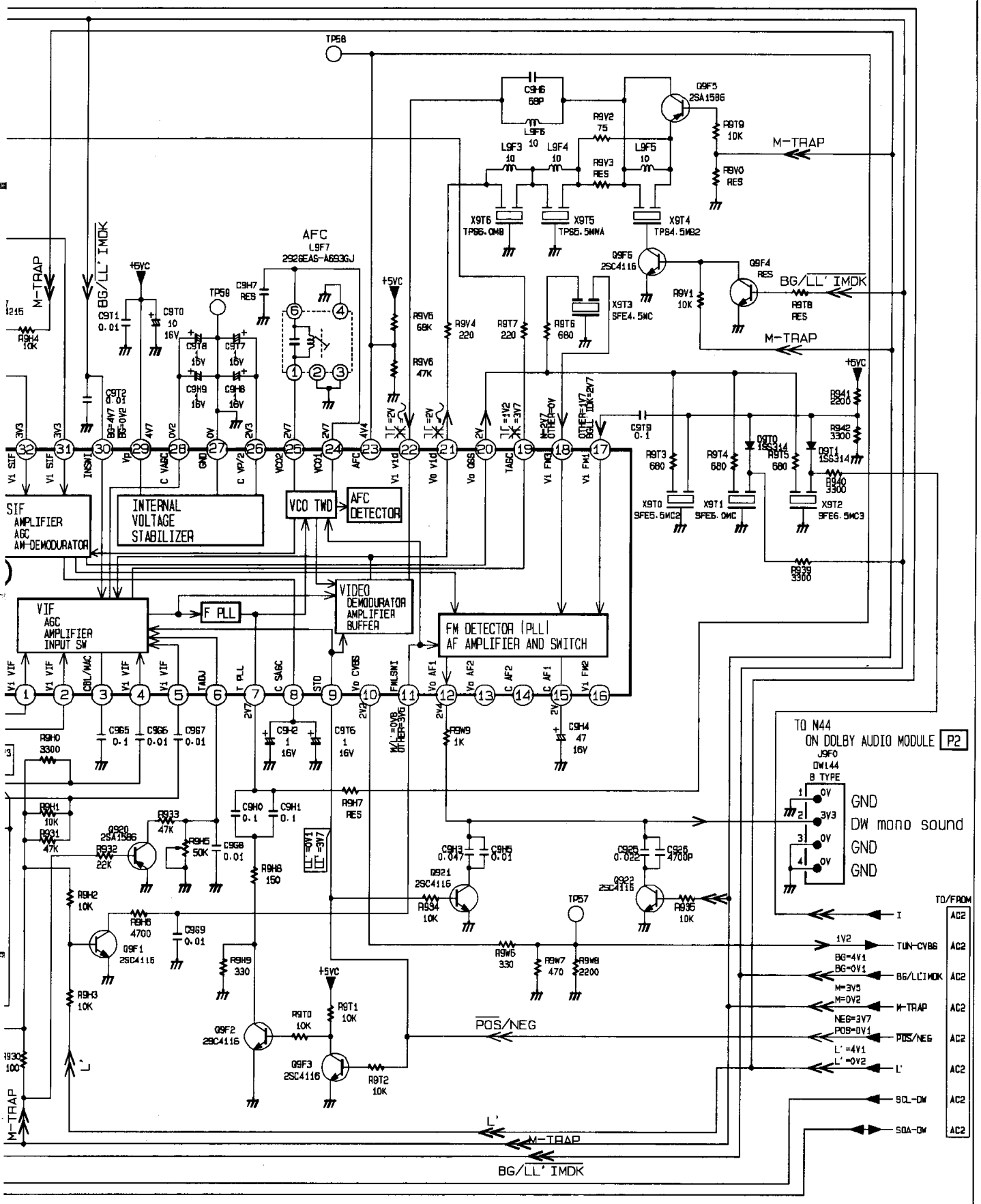

CHASSIS MD2.2

AC1.EPS
120397

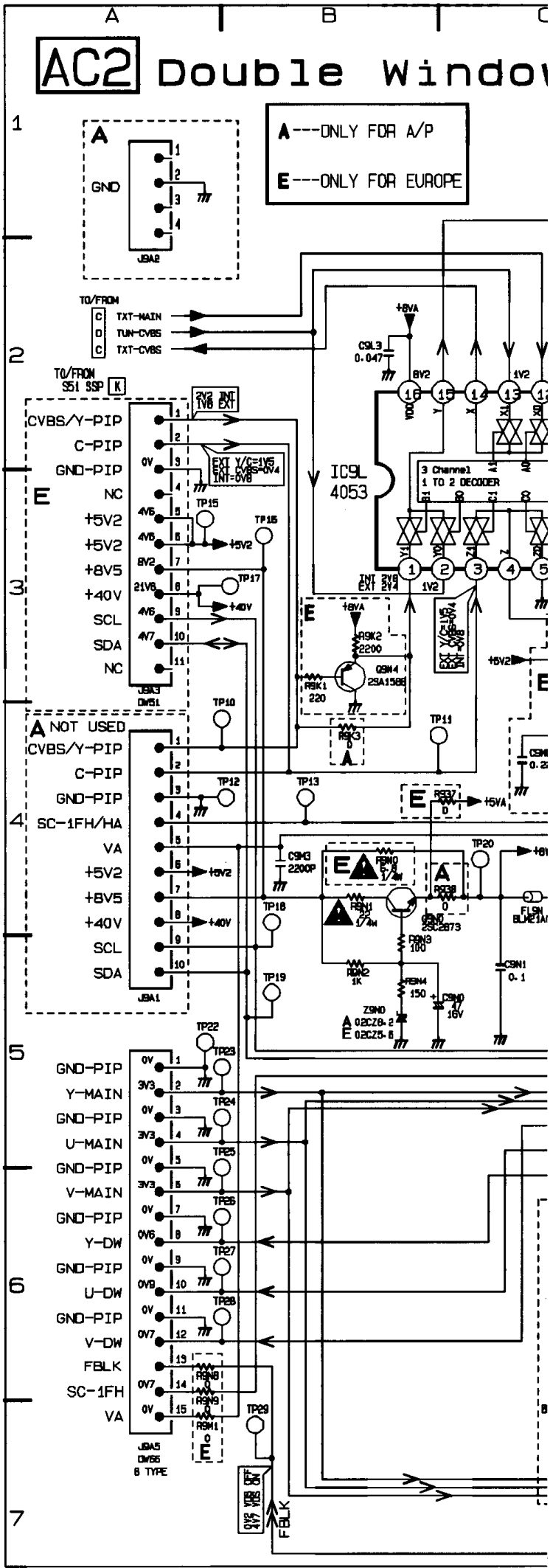
AC2 Double Windo
A---ONLY FOR A/P
E---ONLY FOR EUROPE
GND
JBA2
TO/FROM
TXT-MAIN
TUN-CVBS
TXT-CVBS
TO/FROM SS1 SSP
CVBS/Y-PIP
C-PIP
GND-PIP
NC
+5V2
+8V5
+40V
SCL
SDA
NC
JBA3
DW51
NOT USED
CVBS/Y-PIP
C-PIP
GND-PIP
SC-1FH/HA
VA
+5V2
+8V5
+40V
SCL
SDA
JBA1
GND-PIP
Y-MAIN
GND-PIP
U-MAIN
GND-PIP
V-MAIN
GND-PIP
Y-DW
GND-PIP
U-DW
GND-PIP
V-DW
FBLK
SC-1FH
VA
JBA5
DW55
8 TYPE
IC9L
4053
3 Channel
1 TO 2 DECODER
Q9N4
2SA1588
Q9N1
2SC2873
Z9N0
FBLK

Video-DualScreen-Platine / Platine Video DualScreen

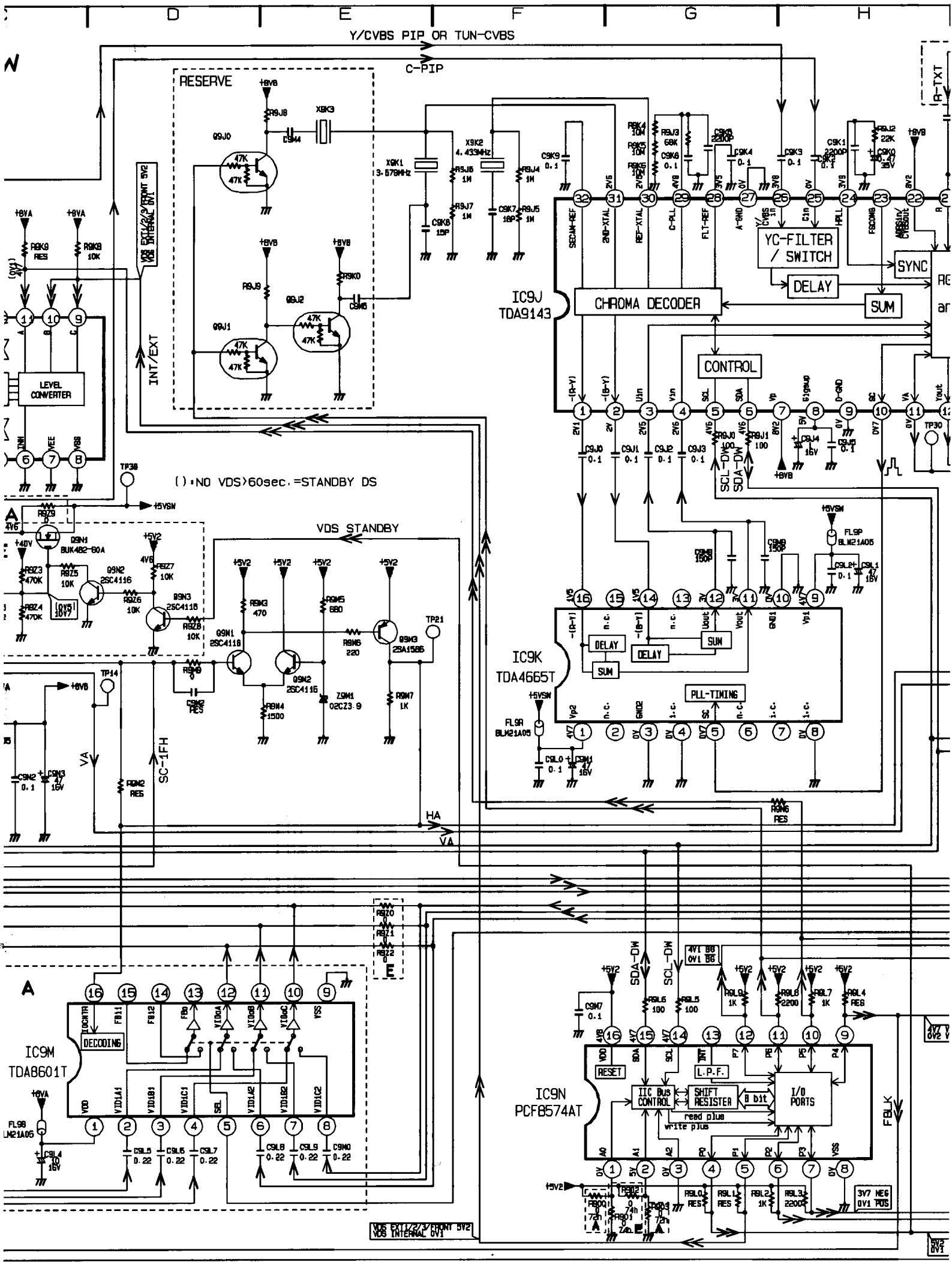

Video DualScreen panel /

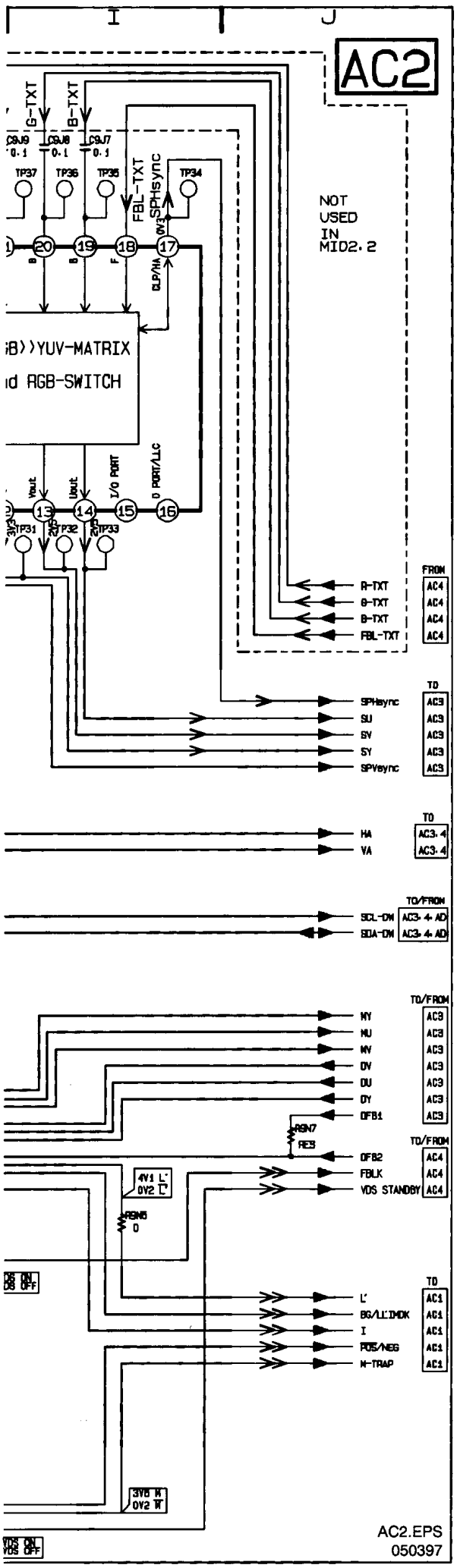

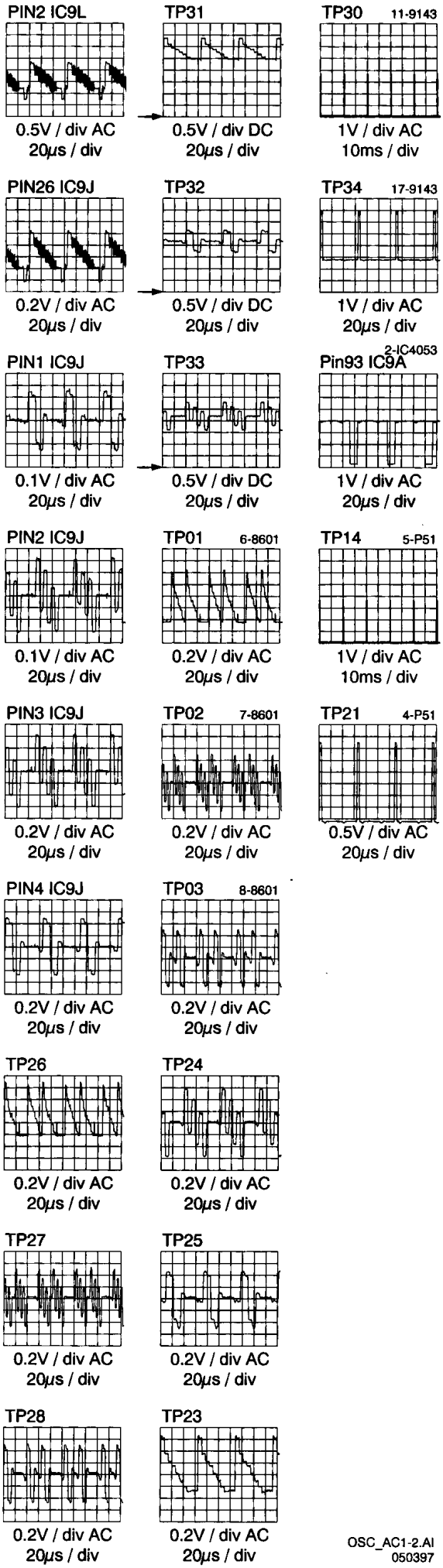

Video DualScreen panel / Video-DualScreen-Platine /

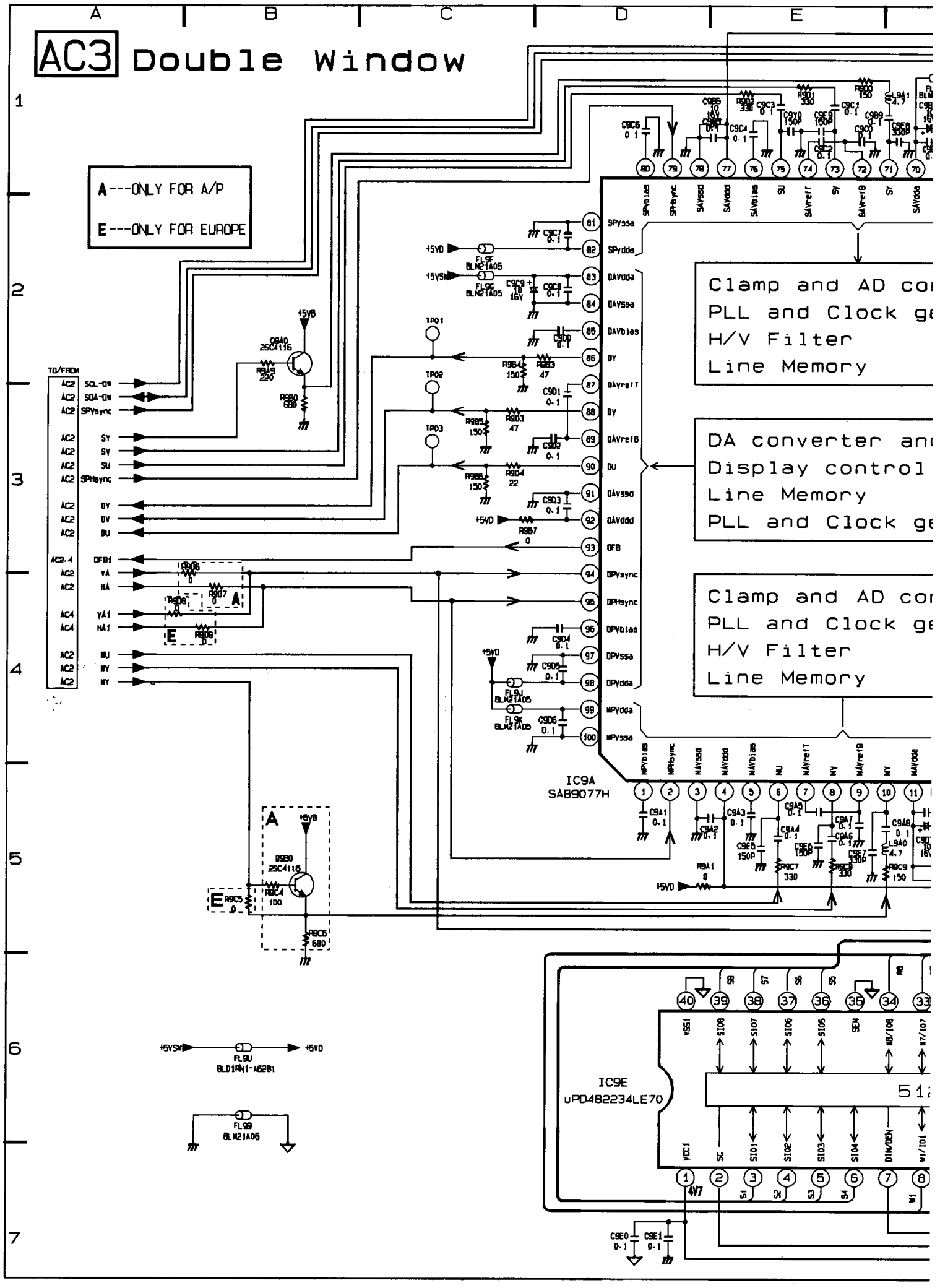

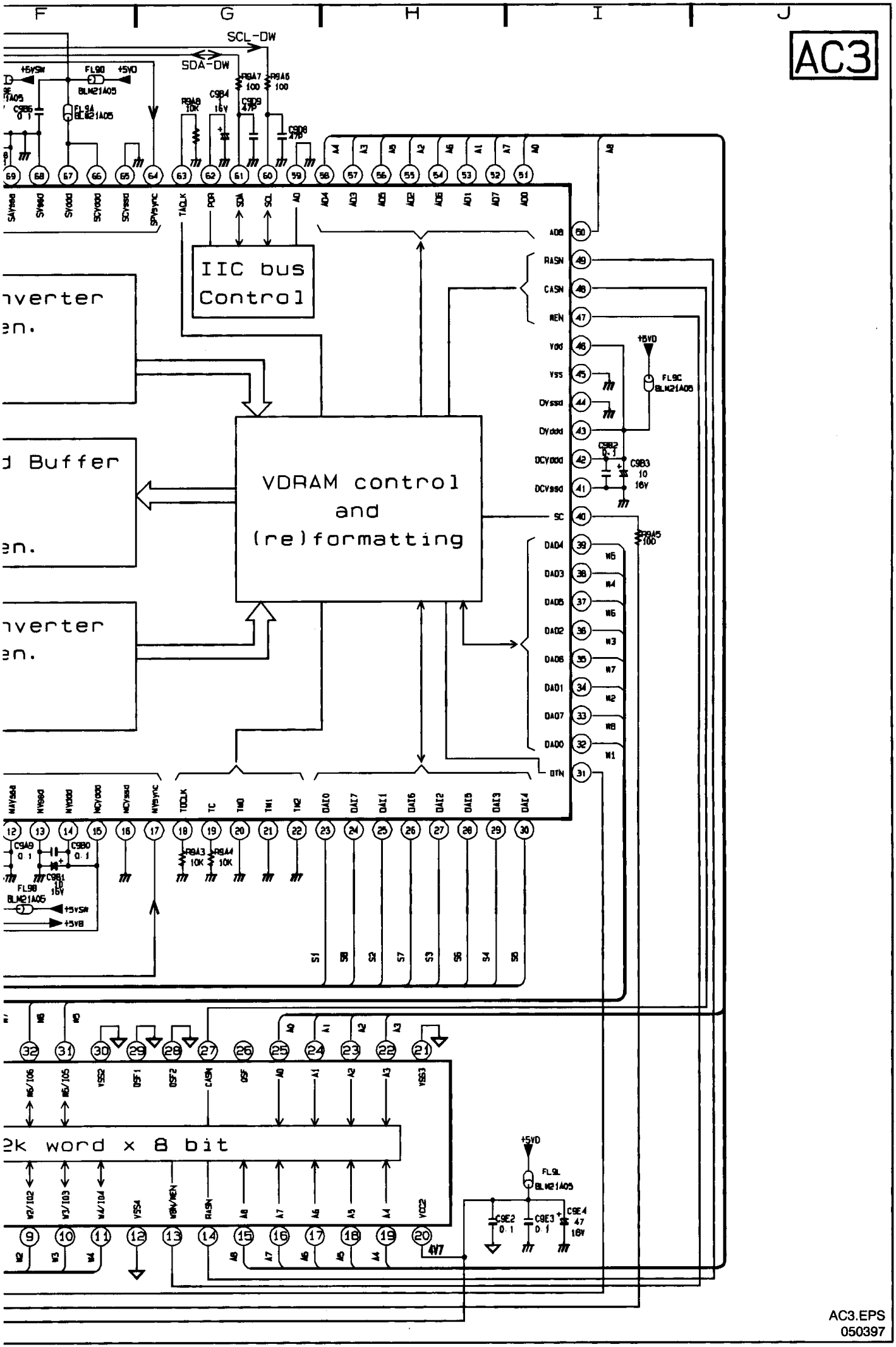
AC3
SCL-DW
SDA-DW
IIC bus Control
VDRAM control and (re)formatting
2k word x 8 bit
AC3.EPS
050397

Video DualScreen panel / Video-DualScreen-Platine / Platine Video DualScreen

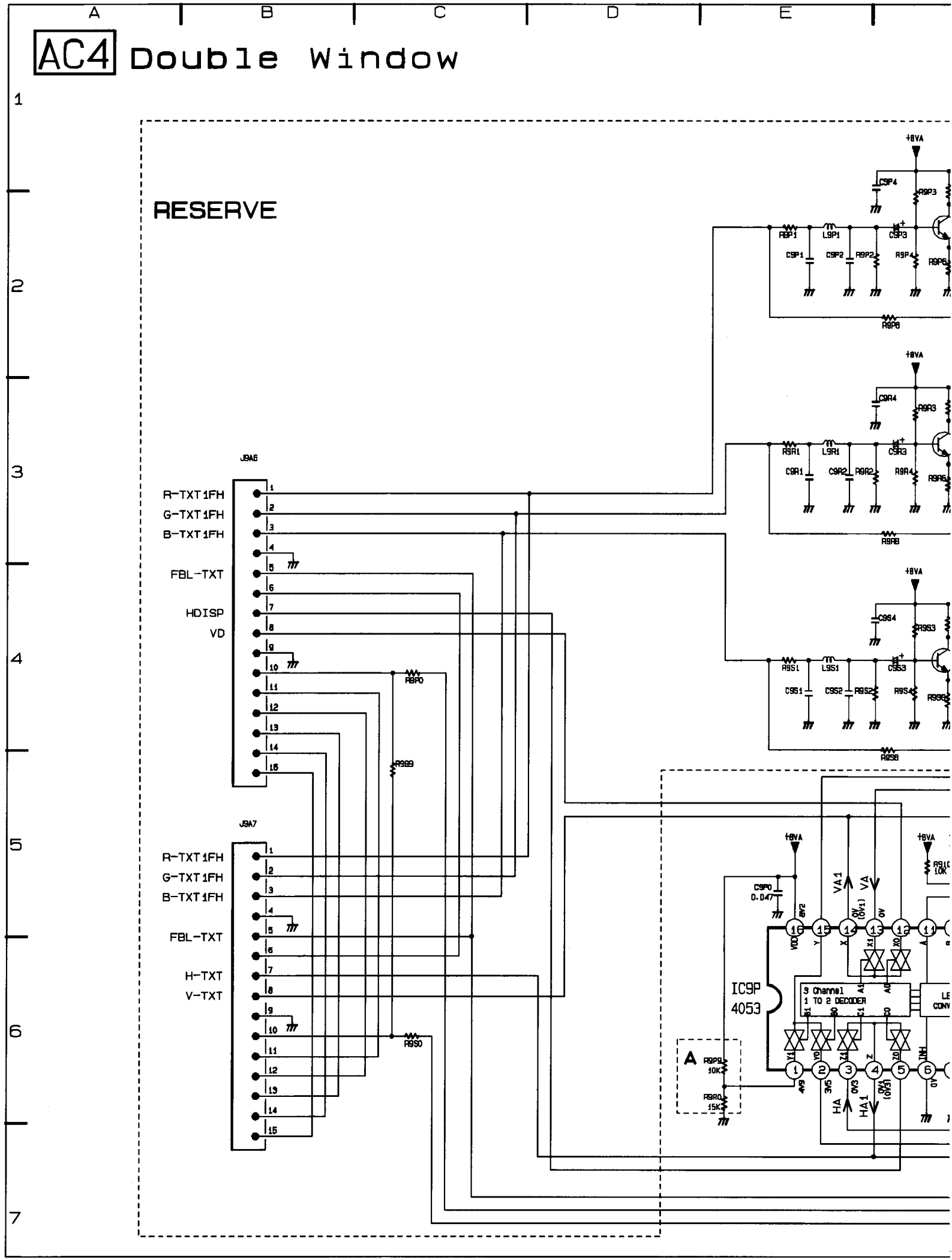

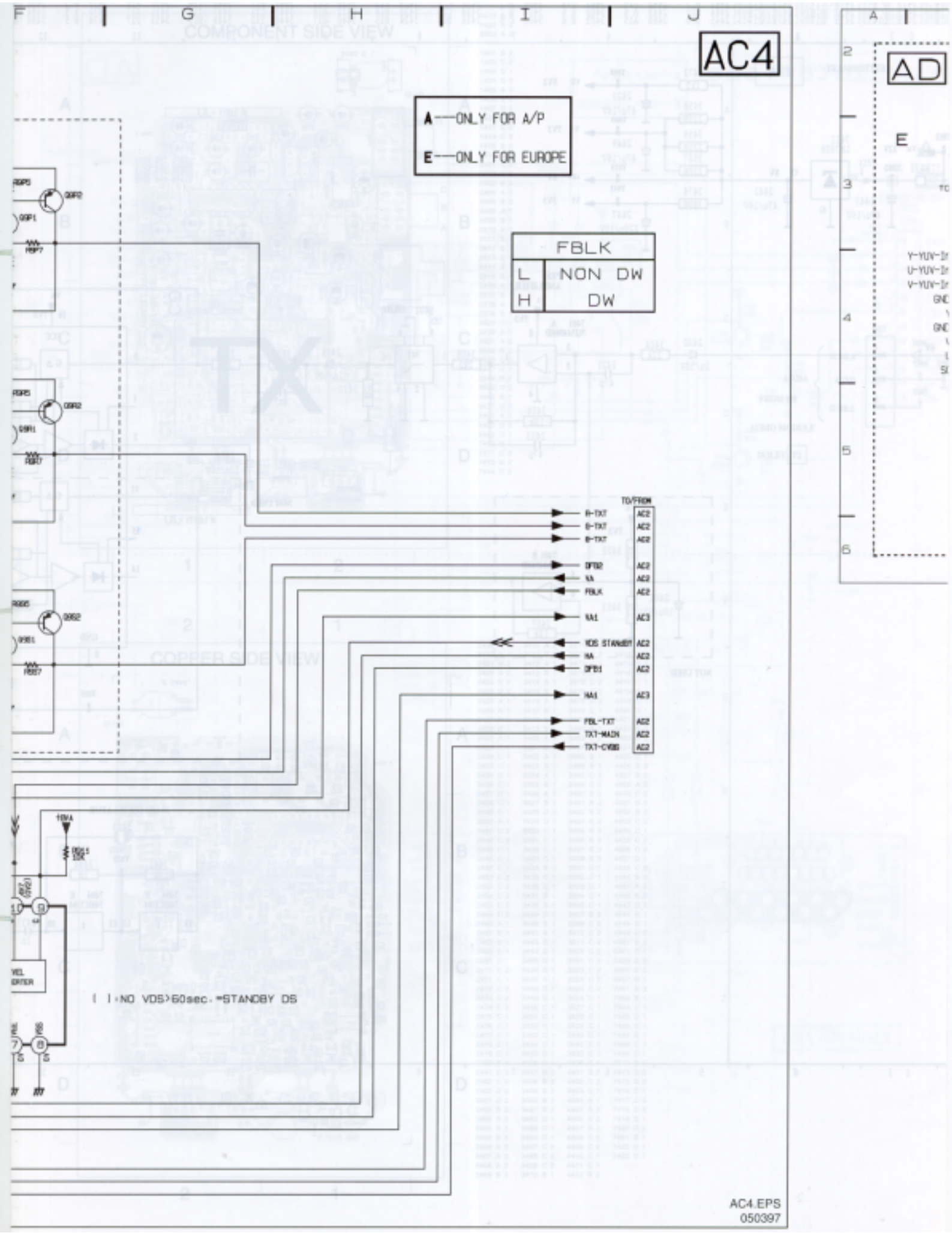
AC4
AD
A---ONLY FOR A/P
E---ONLY FOR EUROPE
FBLK
L NON DW
H DW
TO/FROM
B-TXT AC2
B-TXT AC2
B-TXT AC2
DFB2 AC2
NA AC2
FBLK AC2
NA1 AC3
VDS STANDBY AC2
NA AC2
DFB1 AC2
NA1 AC3
FBL-TXT AC2
TXT-MAIN AC2
TXT-CVBS AC2
10MA
NO VDS>60sec.=STANDBY DS
AC4.EPS
050397

YUV-interface panel / YUV-Schnittstellenplatine / Platine YUV-interface

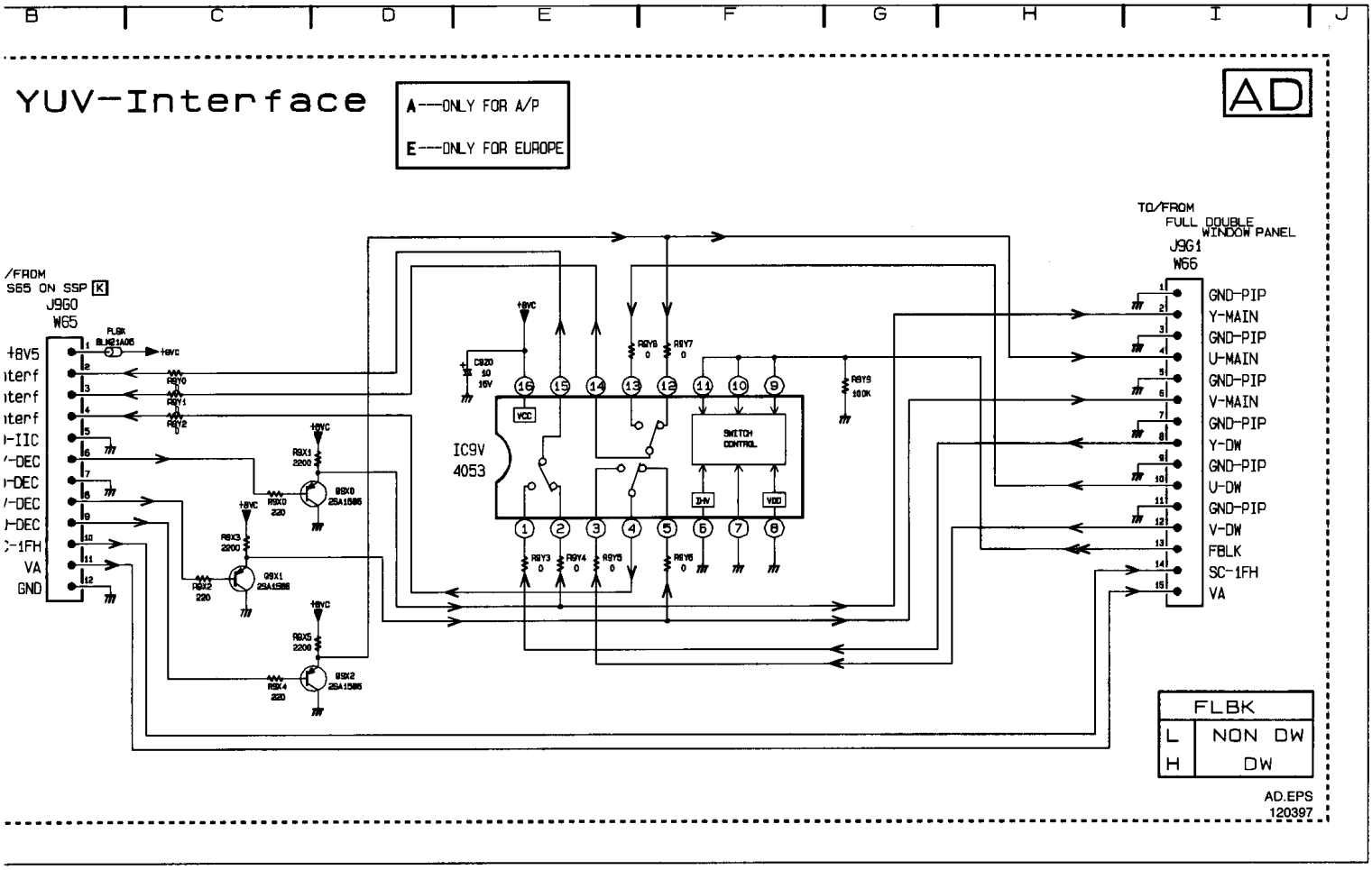

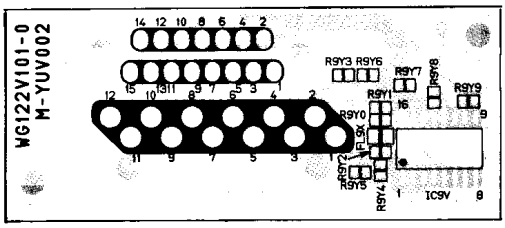

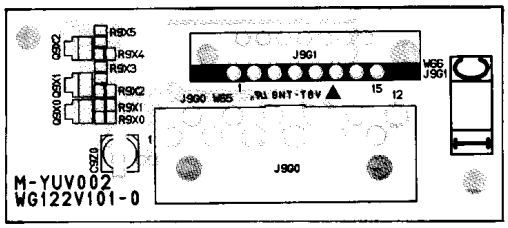

1403	E18	1415	C 2	2404	C 9	2412
1407	H21	1419	J14	2406	D 9	2414
1408	E21	2401	E 5	2408	D11	2416
1414	F21	2402	C 5	2410	D15	2418

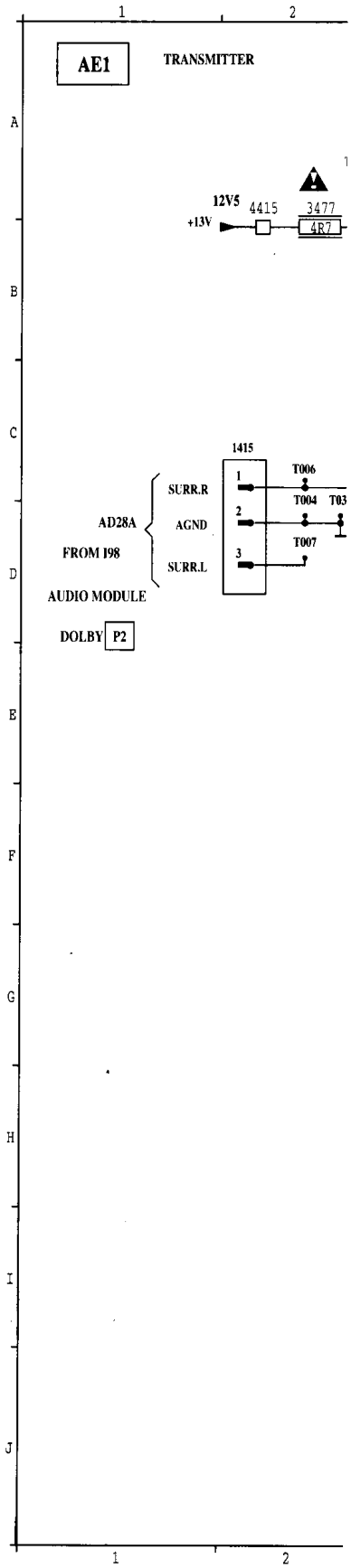

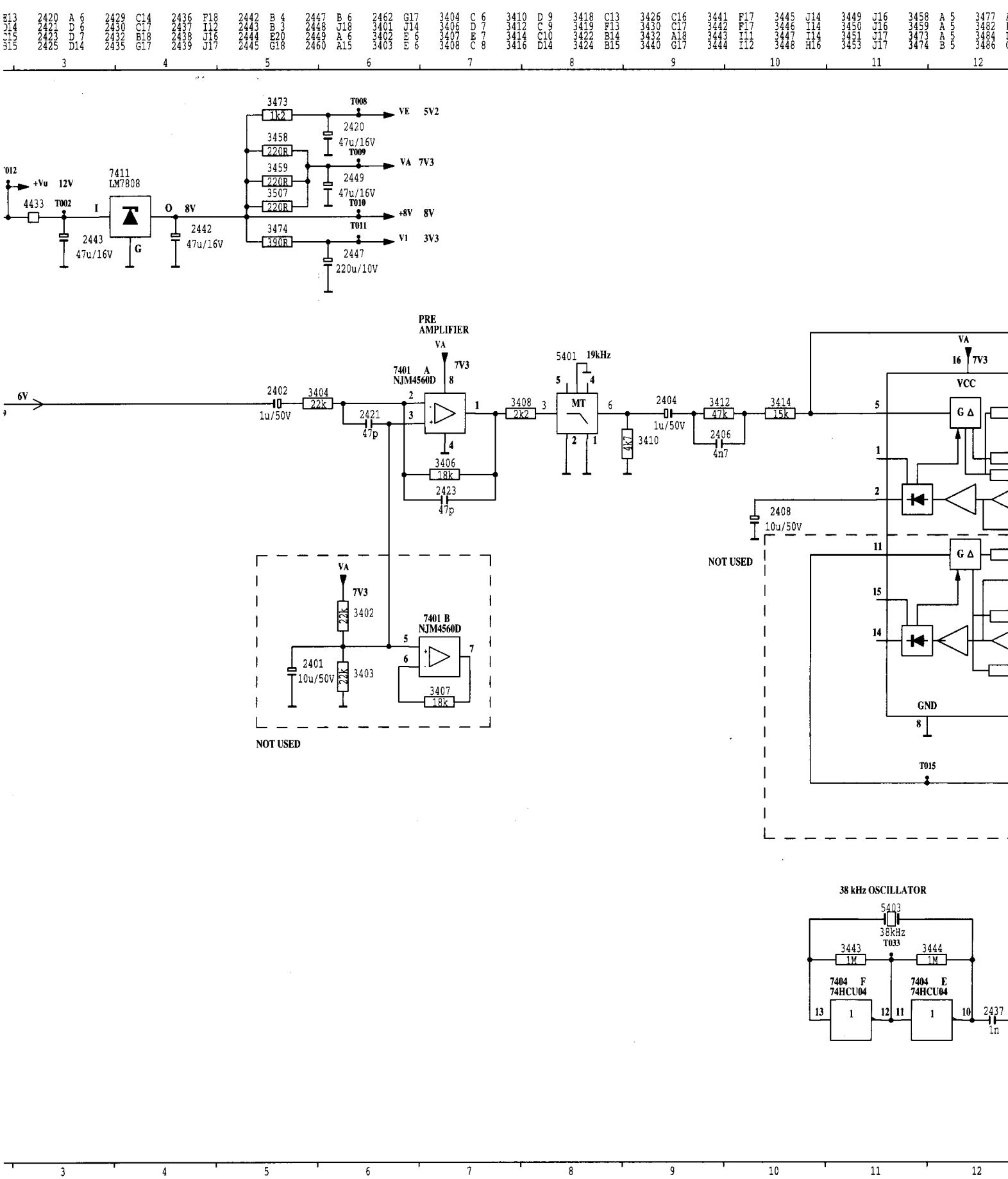
7411
LM7808
+Vu 12V
4433
T002
2443
47u/16V
2442
47u/16V
3473
1k2
3458
220R
3459
220R
3507
220R
3474
390R
T008
VE 5V2
2420
47u/16V
T009
VA 7V3
2449
47u/16V
T010
+8V 8V
T011
V1 3V3
2447
220u/10V
PRE
AMPLIFIER
7401 A
NJM4560D
6V
2402
1u/50V
3404
22k
2421
47p
3406
18k
2423
47p
3408
2k2
5401 19kHz
MT
4k7
3410
2404
1u/50V
3412
47k
2406
4n7
3414
15k
2408
10u/50V
NOT USED
VCC
GND
T015
7401 B
NJM4560D
3402
3403
2401
10u/50V
3407
18k
NOT USED
38 kHz OSCILLATOR
5403
38kHz
T033
3443
1M
3444
1M
7404 F
74HCU04
7404 E
74HCU04
2437
1n

Wireless Dolby / Drahtlos-Dolby / Dolby sans fil

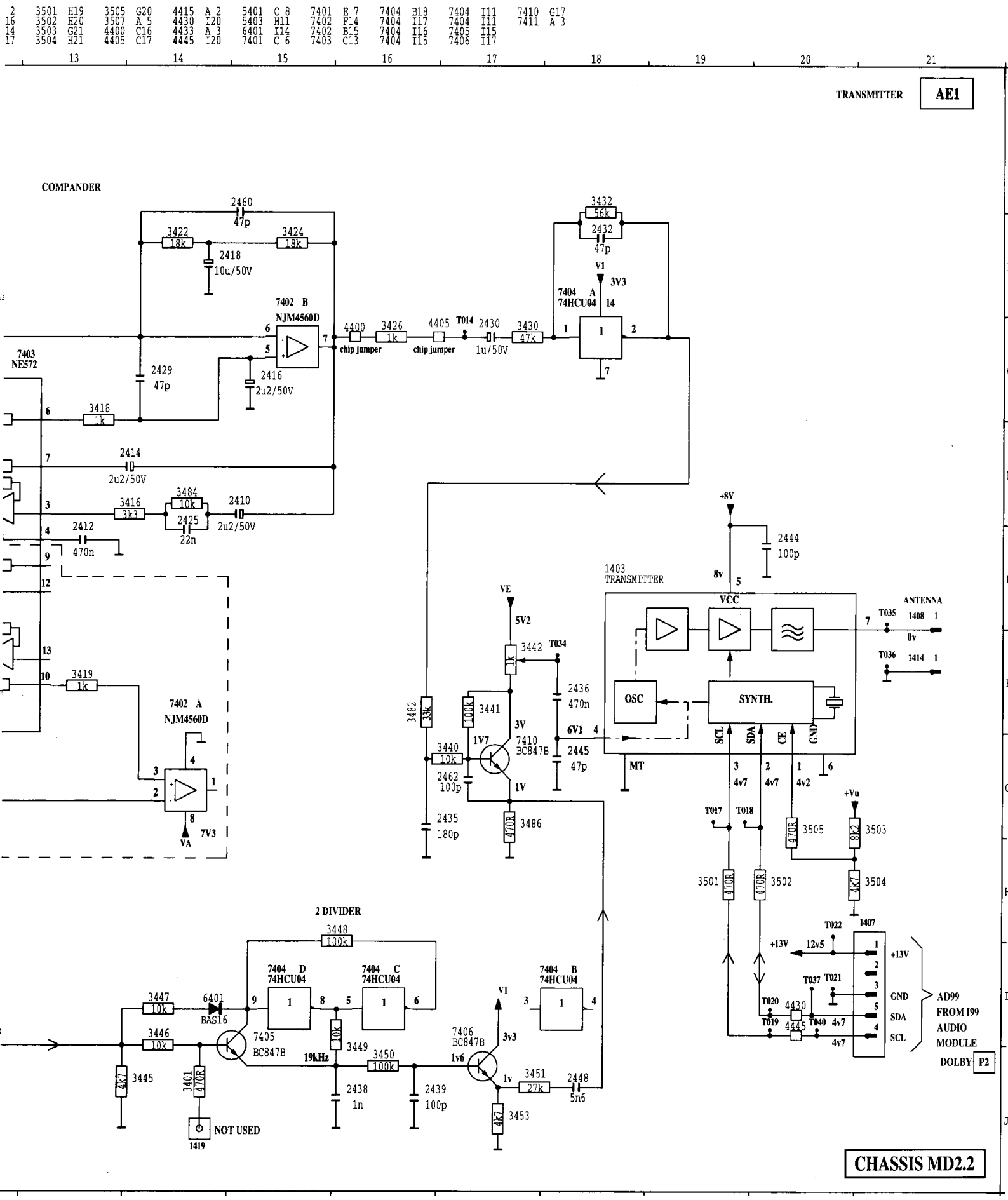

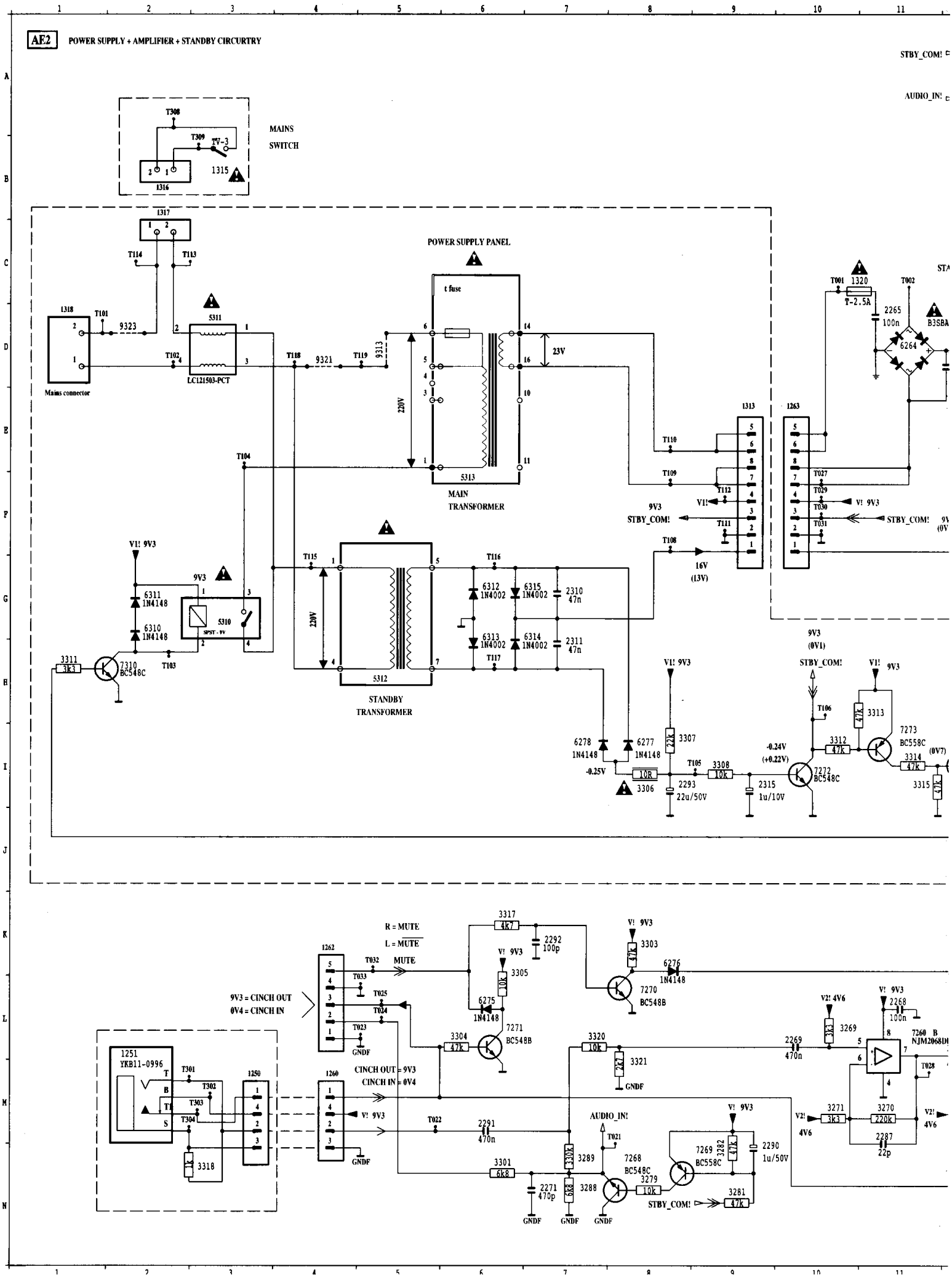
AE2
POWER SUPPLY + AMPLIFIER + STANDBY CIRCURTRY
MAINS SWITCH
POWER SUPPLY PANEL
t fuse
MAIN TRANSFORMER
STANDBY TRANSFORMER
Mains connector
LC121503-PCT
STBY_COM!
AUDIO_IN!
R = MUTE
L = MUTE
9V3 = CINCH OUT
0V4 = CINCH IN
CINCH OUT = 9V3
CINCH IN = 0V4
GNDF

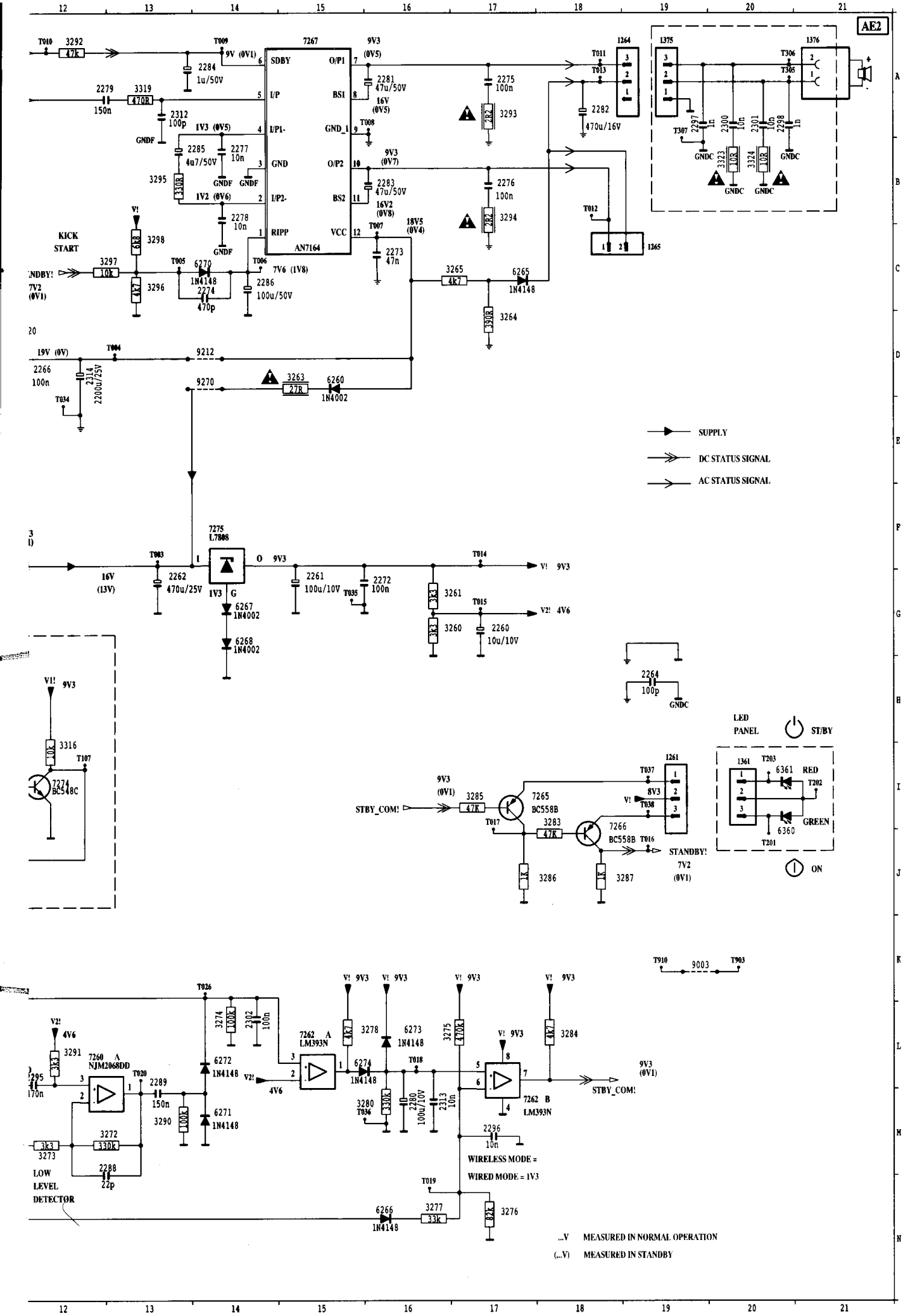
AE2
7267
AN7164
SDBY
I/P
I/P1-
GND
I/P2-
RIPP
O/P1
BS1
GND_1
O/P2
BS2
VCC
KICK START
SUPPLY
DC STATUS SIGNAL
AC STATUS SIGNAL
7275 L7808
LED PANEL
ST/BY
ON
STBY_COM!
STANDBY!
7265 BC558B
7266 BC558B
7274 BC548C
7260 A NJM2068DD
7262 A LM393N
7262 B LM393N
LOW LEVEL DETECTOR
WIRELESS MODE =
WIRED MODE = 1V3
...V MEASURED IN NORMAL OPERATION
(...V) MEASURED IN STANDBY

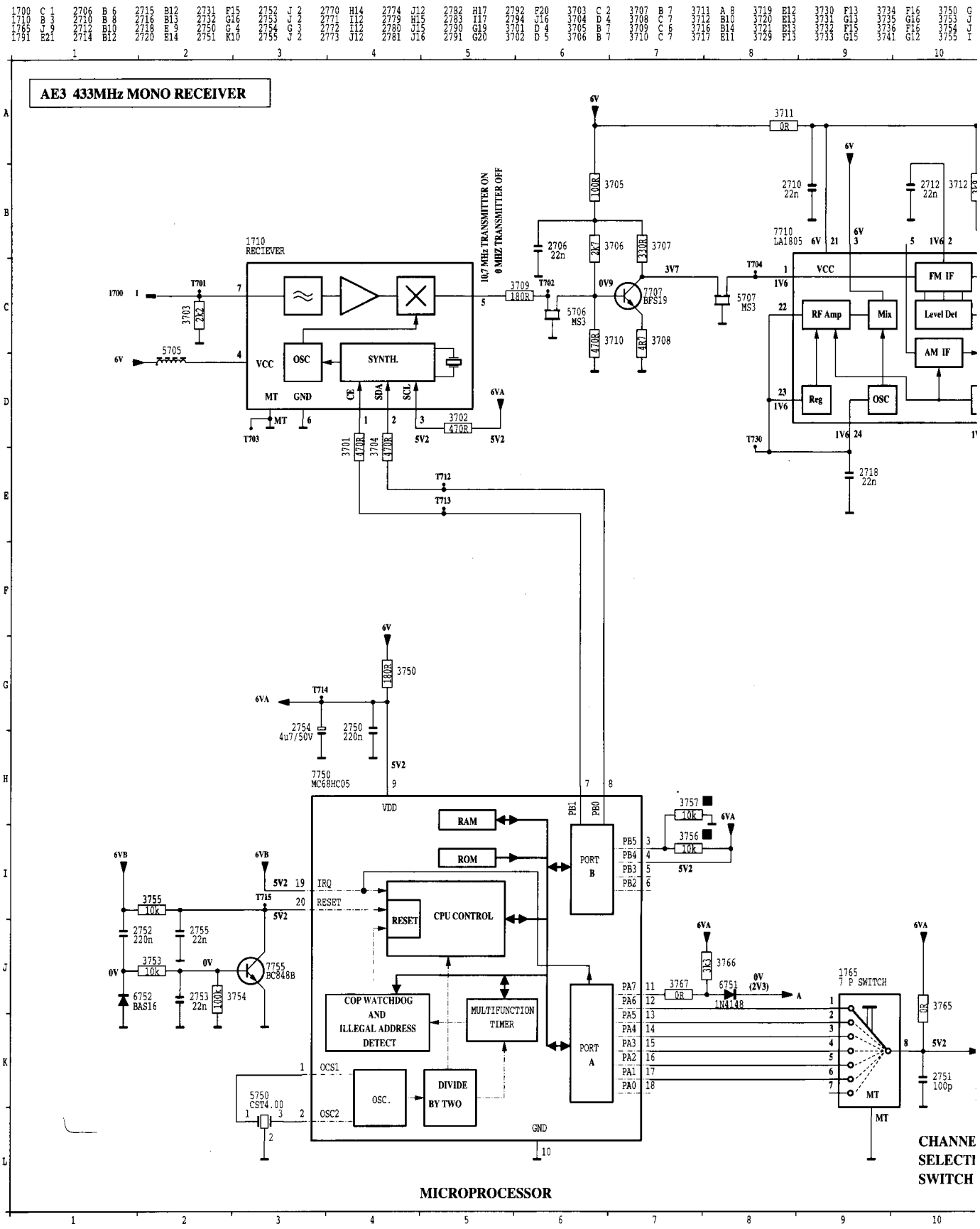

781 A 3
782 A 3
783 A 3
784 A 3
785 A 3
786 A 3
787 A 3
788 A 3
789 A 3
790 A 3
791 A 2
792 A 3
793 A 2
794 A 3
705 A 1
710 A 2
752 A 1
707 A 1
735 A 2
745 A 3
750 A 1
755 A 1
784 A 3
789 A 2

Wireless Dolby / Drahtlos-Dolby / Dolby sans fil

4	3756	I 7	3767	J 7	3779	I16	3783	I18	3791	H20	5706	C 6	5750	K 3	6770	H13	7750	H 3	7780	I16
2	3757	H 7	3770	H14	3780	I16	3784	J20	3793	I19	5707	C 8	6710	B15	7707	C 7	7755	J 3	7784	J19
3	3765	J10	3771	I12	3781	I16	3785	I18	3794	E20	5710	A11	6751	J 8	7710	B 8	7770	H13	7789	H19
2	3766	J 8	3772	J12	3782	I17	3790	H20	5705	C 2	5730	F14	6752	J 2	7735	F16	7780	K16	7790	F19

11 12 13 14 15 16 17 18 19 20 21

AE3

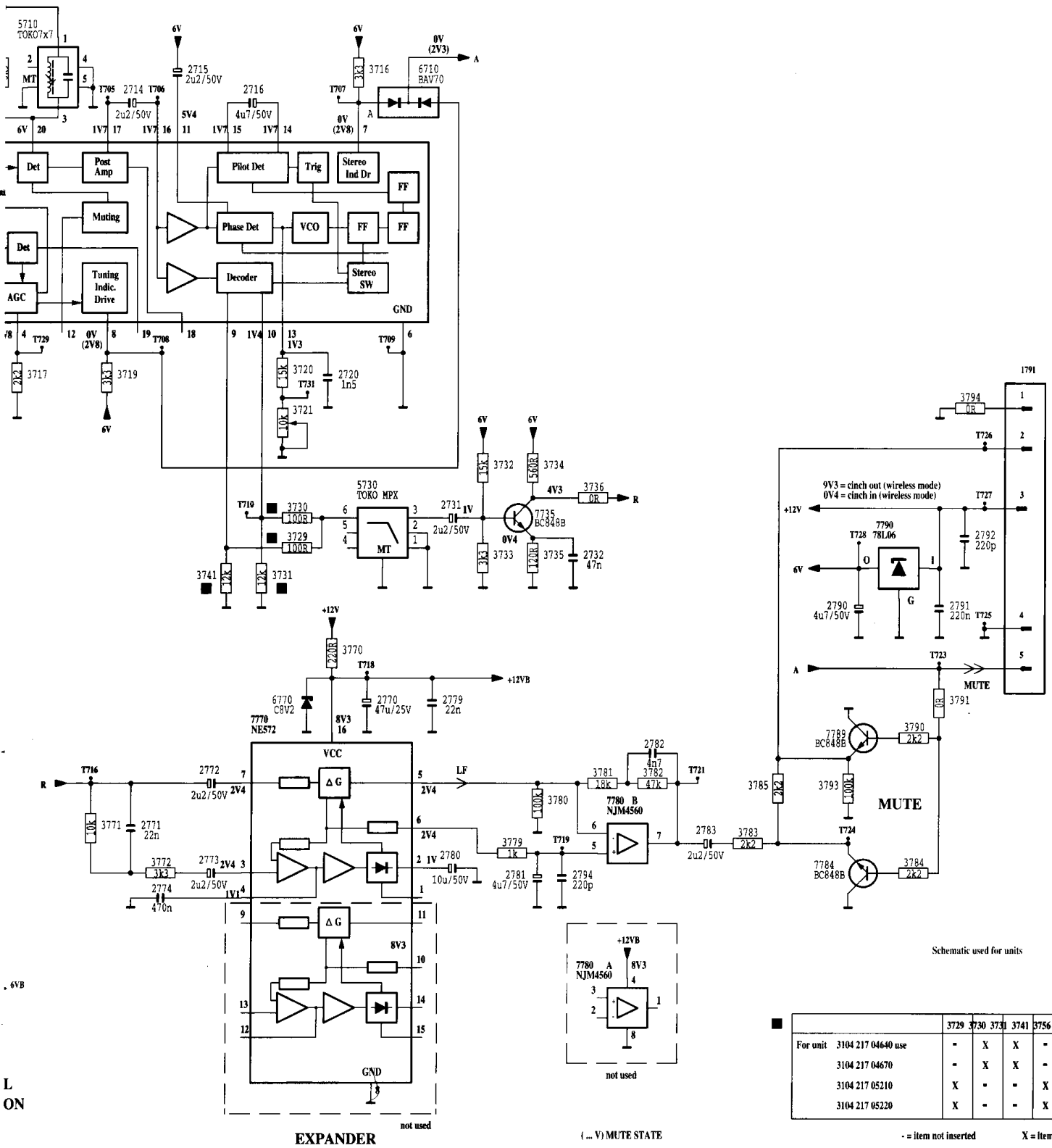

Schematic used for units 3104 217 04640
3104 217 04670
3104 217 05210
3104 217 05220

	3729	3730	3731	3741	3756	3757	
For unit 3104 217 04640 use	-	X	X	-	X	-	
3104 217 04670	-	X	X	-	-	X	
3104 217 05210	X	-	-	X	X	-	
3104 217 05220	X	-	-	X	-	X	

- = item not inserted X = Item inserted

VGA interface panel / VGA-Schnittstellen-platine / Platine VGA-interface

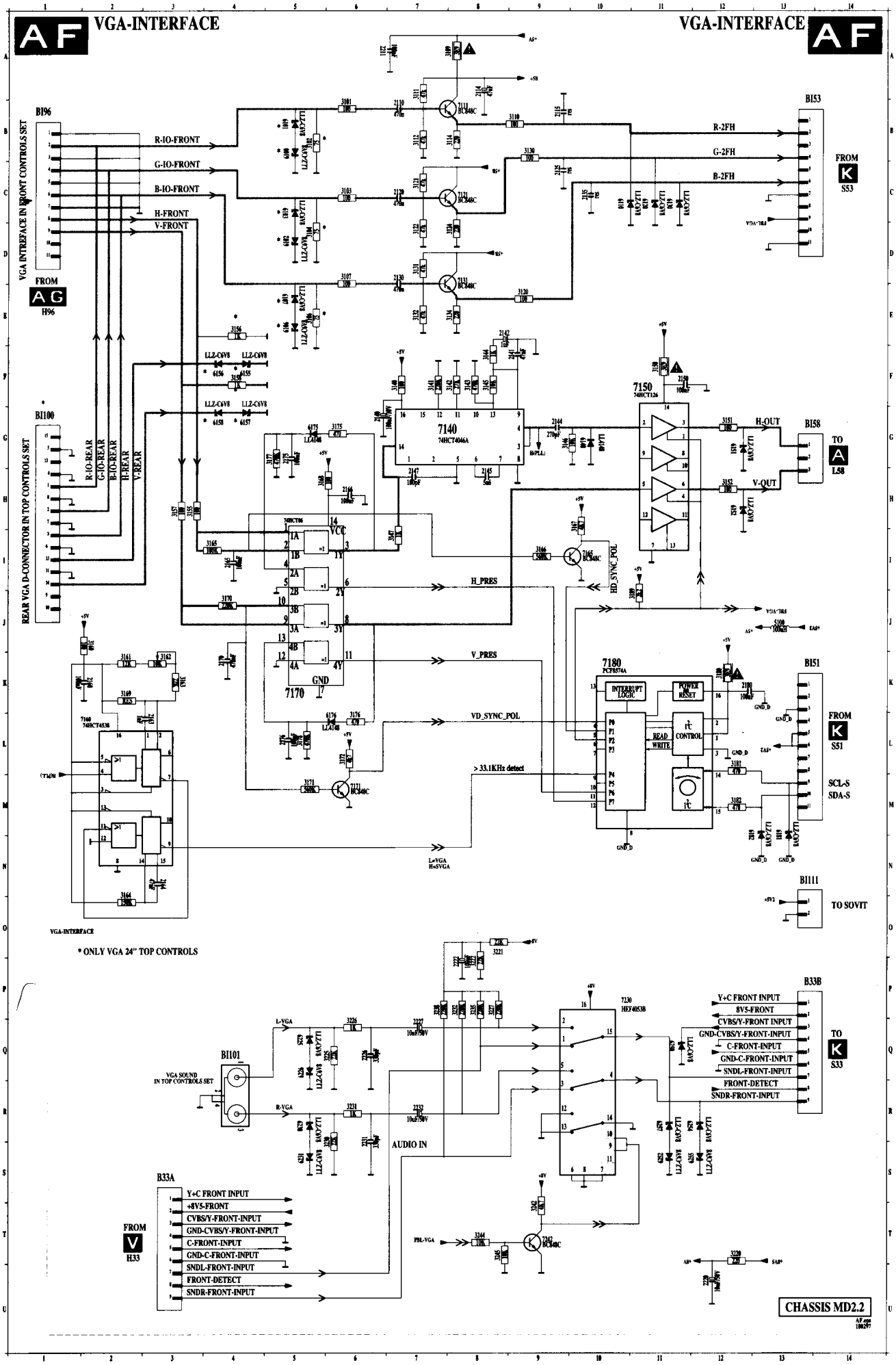

Mains input & RC5 panel (front control styling) / Netzeingang & RC5-Platine (Frontbedienung)/ Platine entrée secteur & RC5 (style commande de sur le haut)

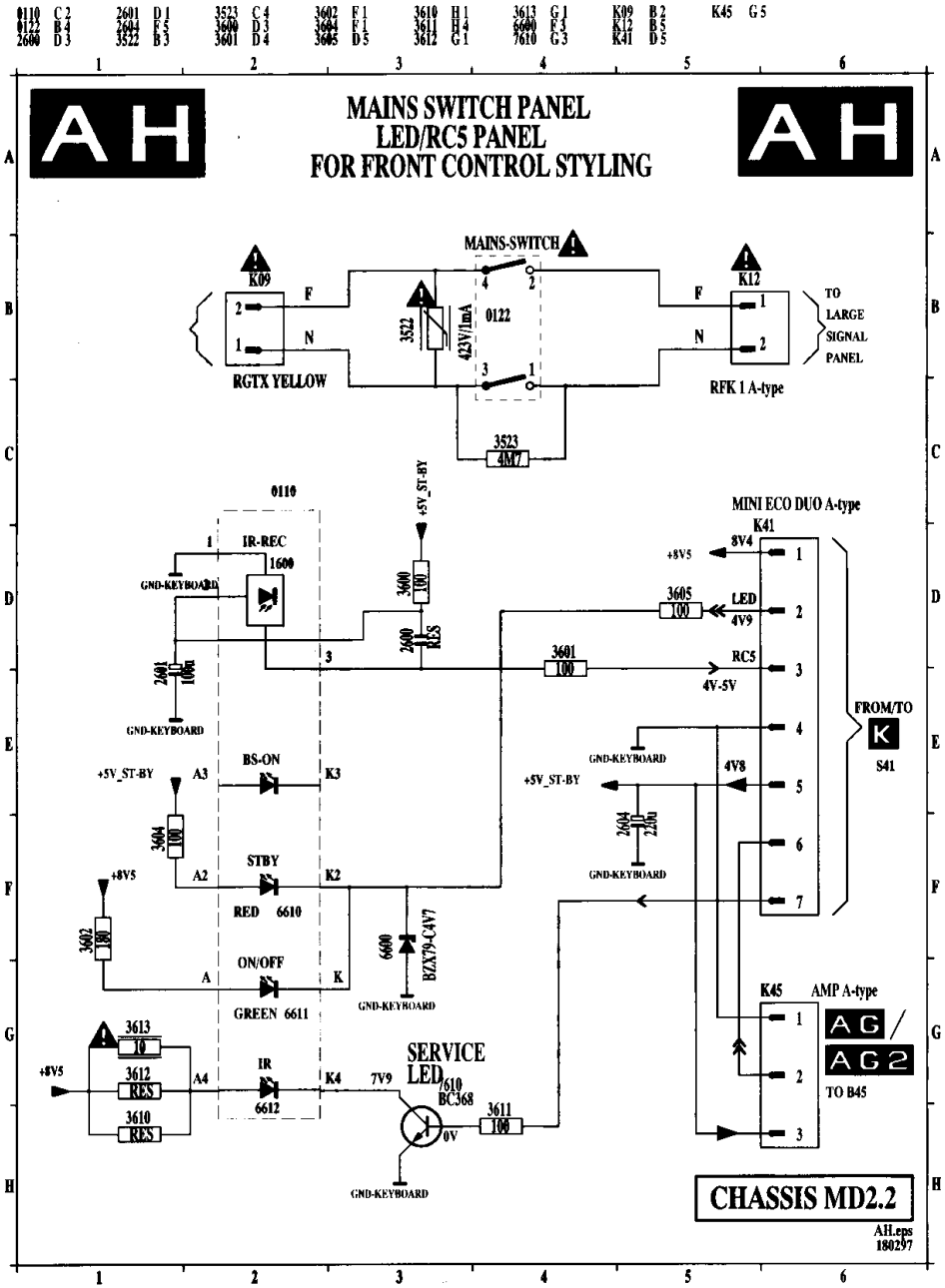

Front input/output panel (top control styling) / Fronteingangs-/Ausgangsplatine / Platine frontale entrée/sortie

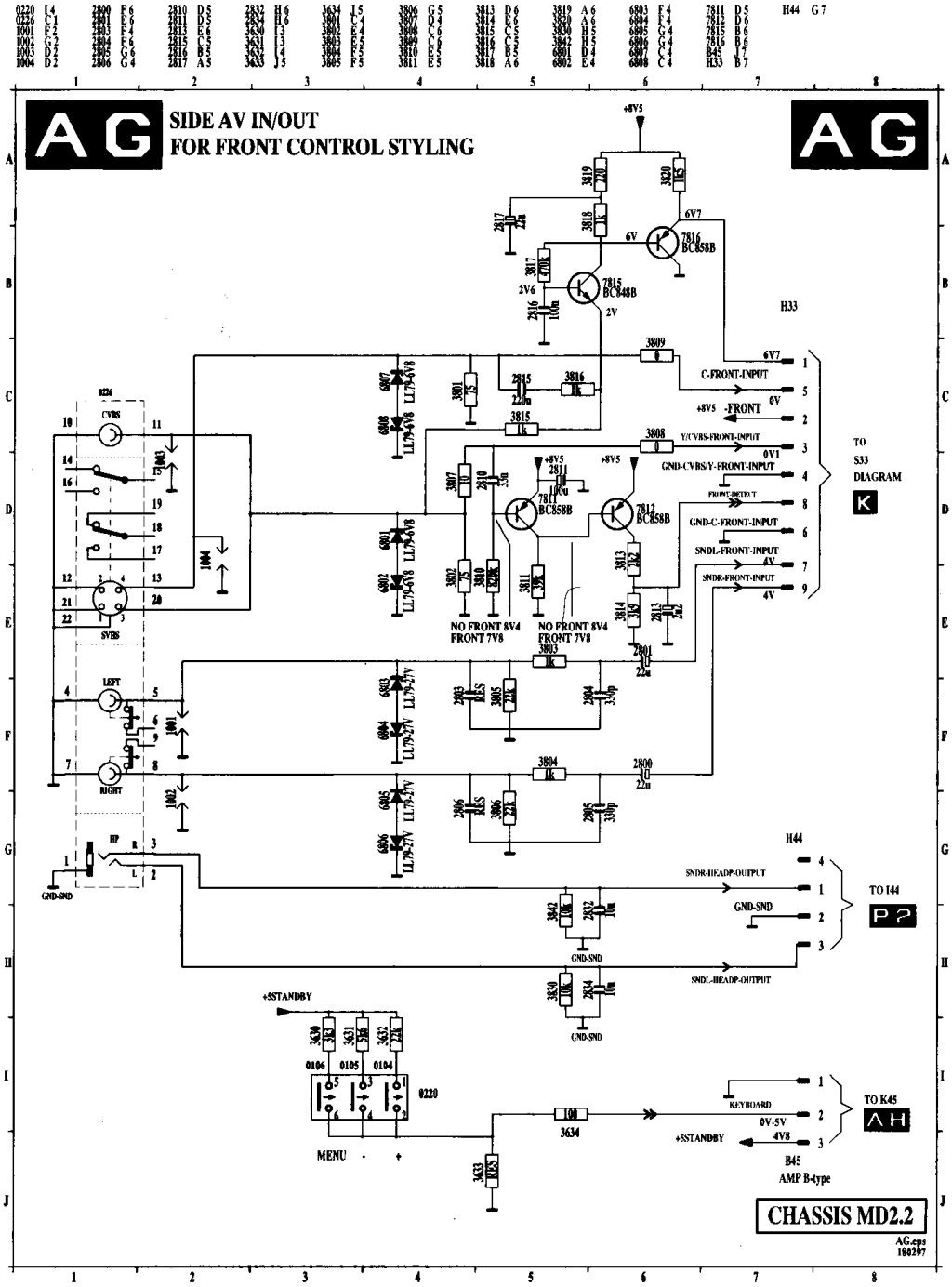

Front input/output panel with VGA input (front control styling) / Fronteingangs-/Ausgangsplatine mit VGA-Eingang / Platine frontale entrée/sortie avec entrée VGA

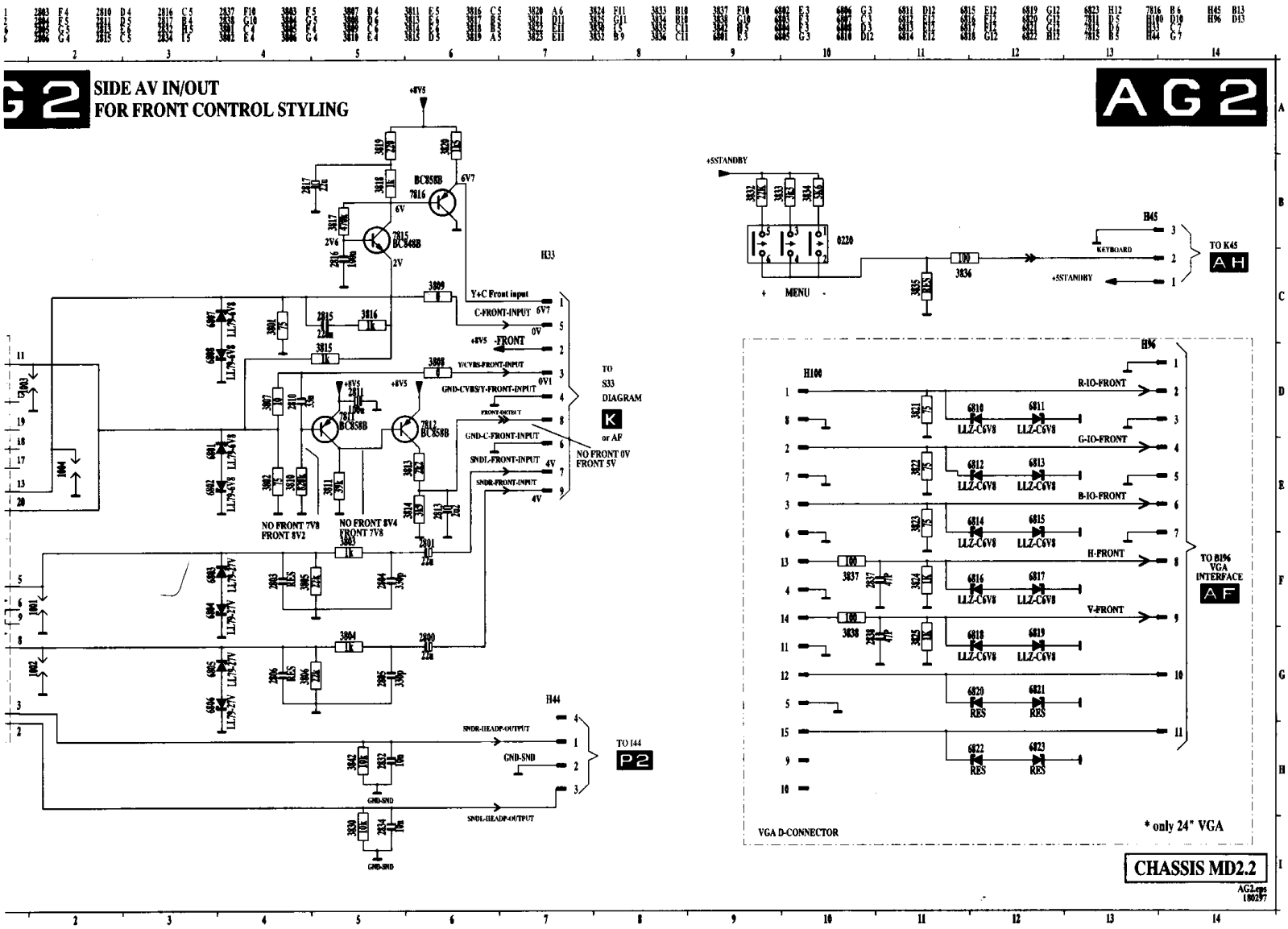

220 A 5	2804 A 1	2813 A 3	2834 A 1	3803 A 1	3808 A 4	3814 A 3	3819 A 3	3824 A 5	3834 A 5	3842 A 1	6804 A 1	6810 A 4	6815 A 4	6820 A 4	7812 A 2	H45 A 5
226 A 1	2805 A 2	2815 A 2	2837 A 4	3804 A 1	3809 A 3	3815 A 2	3820 A 3	3825 A 5	3835 A 5	3999 A 5	6805 A 1	6811 A 4	6816 A 5	6821 A 4	7815 A 3	H96 A 5
800 A 2	2806 A 2	2816 A 3	2838 A 4	3805 A 1	3810 A 2	3816 A 2	3821 A 5	3830 A 1	3836 A 5	6801 A 2	6806 A 1	6812 A 4	6817 A 5	6822 A 4	7816 A 4	H100 A 4
801 A 2	2810 A 2	2817 A 3	3801 A 2	3806 A 2	3811 A 2	3817 A 3	3822 A 4	3832 A 5	3837 A 4	6802 A 2	6807 A 2	6813 A 4	6818 A 5	6823 A 3	H33 A 3	
803 A 1	2811 A 2	2832 A 1	3802 A 3	3807 A 2	3813 A 3	3818 A 3	3823 A 4	3833 A 5	3838 A 4	6803 A 1	6808 A 2	6814 A 4	6819 A 5	7811 A 2	H44 A 1	